LISTINO PREZZI CRG 2012
PRICE LIST CRG 2012

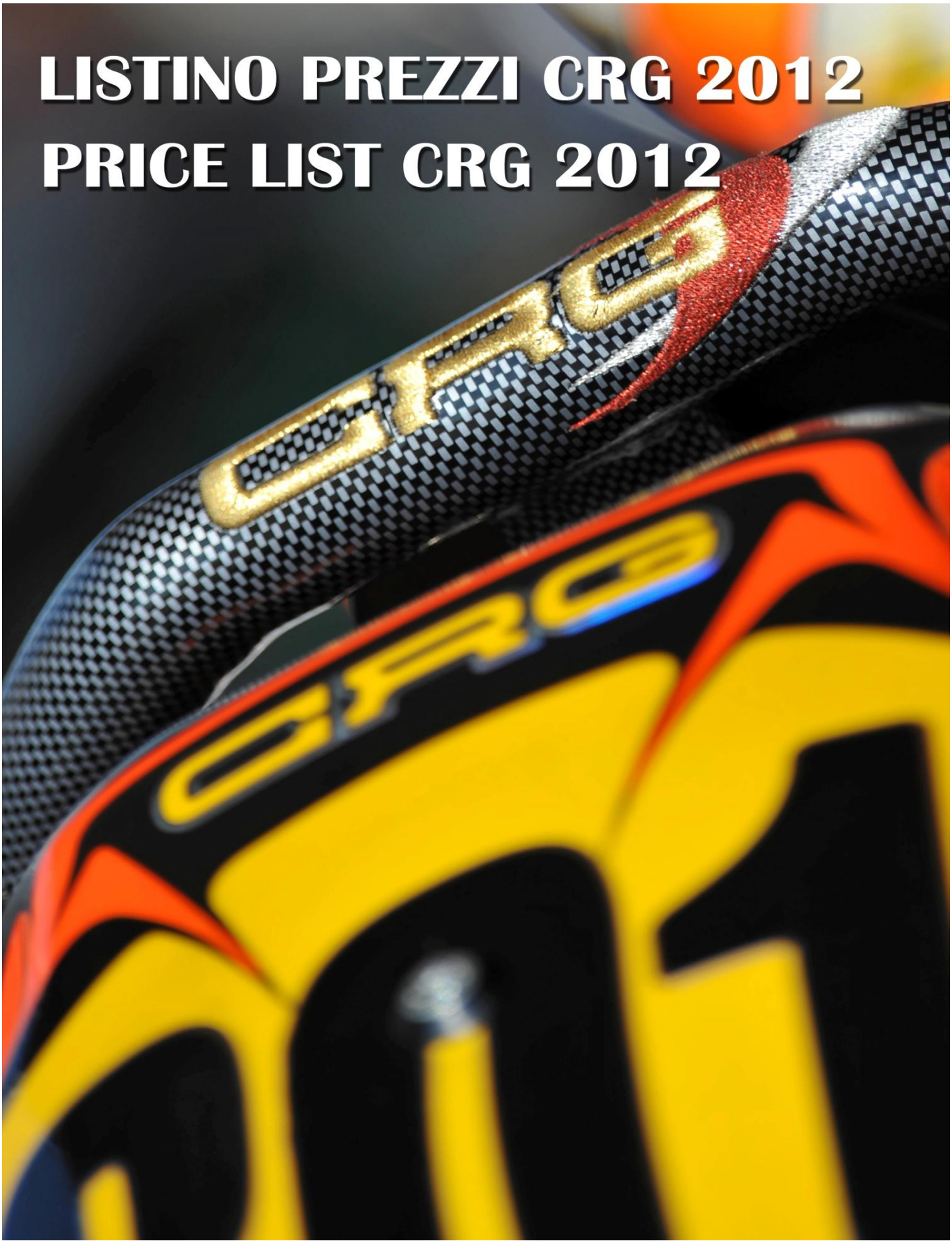

VER. FEB.2012

LA C.R.G. SI RISERVA DI MODIFICARE LE CARATTERISTICHE TECNICHE ED I PREZZI IN QUALSIASI MOMENTO E SENZA PREAVVISO.

LA CRG NON SI RITIENE RESPONSABILE DI EVENTUALI DIFFERENZE FRA LE INFORMAZIONI CONTENUTE NEL CATALOGO ED I PRODOTTI ATTUALI.

I PREZZI SONO DA INTENDERSI IVA (+21%) ESCLUSA E FRANCO SEDE CRG SPA

****

CRG RESERVES THE RIGHT TO MODIFY THE TECHNICAL CHARACTERISTICS AND PRICING AT ANY TIME WITHOUT NOTICE.

CRG WILL NOT BE HELD RESPONSIBILE FOR EVENTUAL VARIATIONS WITH REGARDS TO THE CONTENTS OF THE CURRENT PRICE CATALOGUE AND ACTUAL PRODUCTS.

THE PRICES ARE WITHOUT VAT (+21%) AND THE SHIPPING TERMS ARE EX-WORKS FOR ALL CONSIGNMENTS.

INDEX

TELAI / CHASSIS	> 01
PROPOSTE KART COMPLETI / PACKAGES KART	02 > 04
KIT PRONTO GARA / READY TO RACE KIT	05 > 07
SCOCCHE / FRAMES	08 > 09
STABILIZZATORE / STABILIZER	> 10
CARROZZERIE / NA2 / BODYWORKS	11 > 12
CARENA POSTERIORE / NA9 / REAR FAIRING	> 13
CARROZZERIE / NEW AGE / BODYWORKS	> 14
CARENA POSTERIORE MINI /REAR FAIRING	> 15
NUMERI GARA / NUMER	> 16
TANICA / FUEL TANK	> 17
PARAURTI POSTERIORE / REAR BUMPER	18 > 19
ASSALE POSTERIORE / REAR AXLE	20 > 21
FLANGE / FLANGES	22 > 23
PARTICOLARI MAGNESIO / MAGNESIUM PARTS	> 24
IMPIANTI FRENO / BRAKE SYSTEM	25 > 63
VEN MINI / NEW AGE	25 > 27
V05 GHISA / IRON KF3	28 > 30
V05 DURALCAN KF3	31 > 33
V05 GHISA / IRON KZ	34 > 39
V05 DURALCAN KZ	40 > 45
PINZA V04 POSTERIORE / REAR BRAKE CALIPER V04	> 46
V06 GHISA / IRON KF2	47 > 49
V06 DURALCAN KF2	50 > 52
V08 100cc ECO	53> 56
V08 125cc ECO	57 > 63
PUFFO	> 64
TIRANTI FRENO / BRAKE RODS	65 > 66
BARRETTE STERZO / TRACK RODS	> 67
FUSELLI / STUB AXLES (CASTER NEW SNIPER!!!)	68 > 72
CERCHI / RIMS	> 73

MOZZI RUOTA / WHEEL HUBS 74 > 75

MOZZI CORONA-DISCO / SPROCKET-DISC HUBS 76 > 77

VOLANTI & PIANTONI / STEERING WHEELS & COLUMNS > 78

LEVE E COMANDI / CONTROL LEVERS 79 > 80

PIANALE / FLOOR TRAY 81 > 82

SEDILI / SEATS > 83

RINFORZI E SUPPORTI / SUPPORTS & REIFORCEMENTS 84 > 86

RADIATORE / RADIATOR 87 > 89

FILTRI / FILTERS > 90

CORONE E CATENE / CHAIN & SPROCKETS > 91

KIT RIPARA DISCO / CHAIN-DISC GUARD > 91

KIT PARACATENA / DISC GUARD > 92

RICAMBI PISTA MANUTENZIONE / TOOLS & TRACK MAINTENANCE 93 > 94

ARTICOLI PUFFO / ITEMS PUFFO 95 > 97

SET PNEUMATICI / TYRES SET > 98

MOTORI / ENGINES > 98

ABBIGLIAMENTO / CLOTHING 99 > 107

COD	DESCRIZIONE ITEMS
CRG.10200NA2POS	ROADREBEL 100 50 V05 D NA2/NA9 T
CRG.10200LIGHT	ROADREBEL 100 50 V05 D NA2/NA9 T
CRG.10204NA2POS	ROADREBEL 100 50 V05 G-I NA2/NA9 T
CRG.10204LIGHT	ROADREBEL 100 50 V05 G LIGHT/MG NA9 T
CRG.10218NA2POS	ROADREBEL 100 50 V06-V05 G-I NA2/NA9 T
CRG.10218LIGHT	ROADREBEL 100 50 V06-V05 G-I MG NA2/NA9 T
CRG.10202XL	ROADREBEL 125 50 V05 D LIGHT/MG XL T
CRG.10202NA2POS	ROADREBEL 125 50 V05 D NA2/NA9
CRG.10202LIGHT	ROADREBEL 125 50 V05 D LIGHT/MG NA9 T
CRG.10210NA2POS	ROADREBEL 125 50 V05 G-I NA2/NA9
CRG.10210LIGHT	ROADREBEL 125 50 V05 G-I LIGHT/MG NA9 T
CRG.10210XL	ROADREBEL 125 50 V05 G LIGHT/XL NA9 T
CRG.10231NA2POS	BAD BOY 100 50 V05 D NA2/NA9
CRG.10228NA2POS	BAD BOY 100 50 V05 G-INA2/NA9
CRG.10228LIGHT	BAD BOY 100 50 V05 LIGHT/MG NA2/NA9
CRG.10227NA2POS	BAD BOY V06/V05 G-I 50 NA2/NA9
CRG.10230LIGHT	BAD BOY 125 50 V05 D LIGHT/MG NA2/NA9
CRG.10229NA2POS	BAD BOY 125 50 V05 G-I NA2/NA9
CRG.10229LIGHT	BAD BOY 125 50 V05 G-I LIGHT/MG NA2/NA9
CRG.10201LIGHT	BLACK STAR 100 50 V05 LIGHT NA9 T
CRG.10201NA2POS	BLACK STAR 100 50 V05 D NA2/NA9
CRG.10205LIGHT	BLACK STAR 100 50 V05 G-I LIGHT NA2/NA9 T
CRG.10205NA2POS	BLACK STAR 100 50 V05 G-I NA2/NA9 T
CRG.10217LIGHT	BLACK STAR 100 V06-V05 D 50 MG NA2/NA9 T
CRG.10217NA2POS	BLACK STAR 100 V06/V05 G-I 50 NA2/NA9 T
CRG.10203NA2POS	BLACK STAR 125 50 V05 D NA2/NA9
CRG.10206LIGHT	BLACK STAR 125 50 V05 G-I LIGHT/MG NA9 T
CRG.10206NA2POS	BLACK STAR 125 50 V05 G-I NA2/NA9 T
CRG.10213NA2POS	KT1 100 50 V05 D NA2/NA9 T
CRG.10212NA2POS	KT1 100 50 V05 G-I NA2/NA9 T
CRG.10223NA2POS	KT1 V06/V05 G-I 50 NA2/NA9 T
CRG.10216NA2POS	KT1 125 50 V05 G-I NA2/NA9
CRG.10237	KT1 100 50 V05 G-I MG NA2/NA9 T
CRG.10169	DARK KNIGHT KF3 V05 G-I 50 MG NA2/NA9 T
CRG.10145	DD2 CRG 32/32 40 V05 G-I NA2
CRG.10145LIGHT	DD2 CRG 32/32 40 V05 G-I LIGHT NA2
CRG.10146	DD2 CRG 32/32 40 V05 D NA2
CRG.10346	DD2 CRG 30/32 40 V05 D NA2
CRG.10160	DARK KNIGHT KF3 V05 G-I 50 NA2/NA9 T
CRG.10161	DARK KNIGHT KF2 V06-V05 G-I 50 NA2/NA9
CRG.10161 LIGHT	DARK KNIGHT KF2 V06-V05 G-I LIGHT POST
CRG.10162	DARK KNIGHT KZ1-2 125 V05 G-I NA9 T
CRG.10507	MINI NA3 6F 30/NA/CARENA P.PLAST
CRG.10527	MINI NA JR 30/NA/CARENA P.KG

CRG.00048 **PUFFO KART / SMURF**

CMX.10507 **MINI NA3 950**

CRG.10011/ROK **GLOBALKART ROK**

CRG.10011/SUPRO **GLOBALKART SUPER ROK**

CRG.10150 **GLOBAL SHIFTER**

CRG.10046	**DD2 DARK RIDER ROTAX**
CRG.10246	**DD2 V08**
CRG.10245	**DD2 SUPERSPORT V08**
CRG.10445	**DD2 SUPERSPORT V05 NO ENGINE/TYRE**
CRG.10146	**DD2 CRG 32/32 40 V05 D NA2**
CRG.10346	**DD2 CRG 30/32 40 V05 D NA2**

NOL.20099 BLACK FLASH MOD. TENDICINGHIA / TURNBUCKLE
NOL.20090 BLACK FLASH MOD. TENDICATENA / TIGHTENER
NOL.20094 BLACK FLASH NO MOTORE / NO ENGINE
NOL.20095 BLACK FLASH C/FRENI ANT. / WITH FRONT REAR

NOL.30090 BLACK FLASH BIPOSTO / WHIT-KART

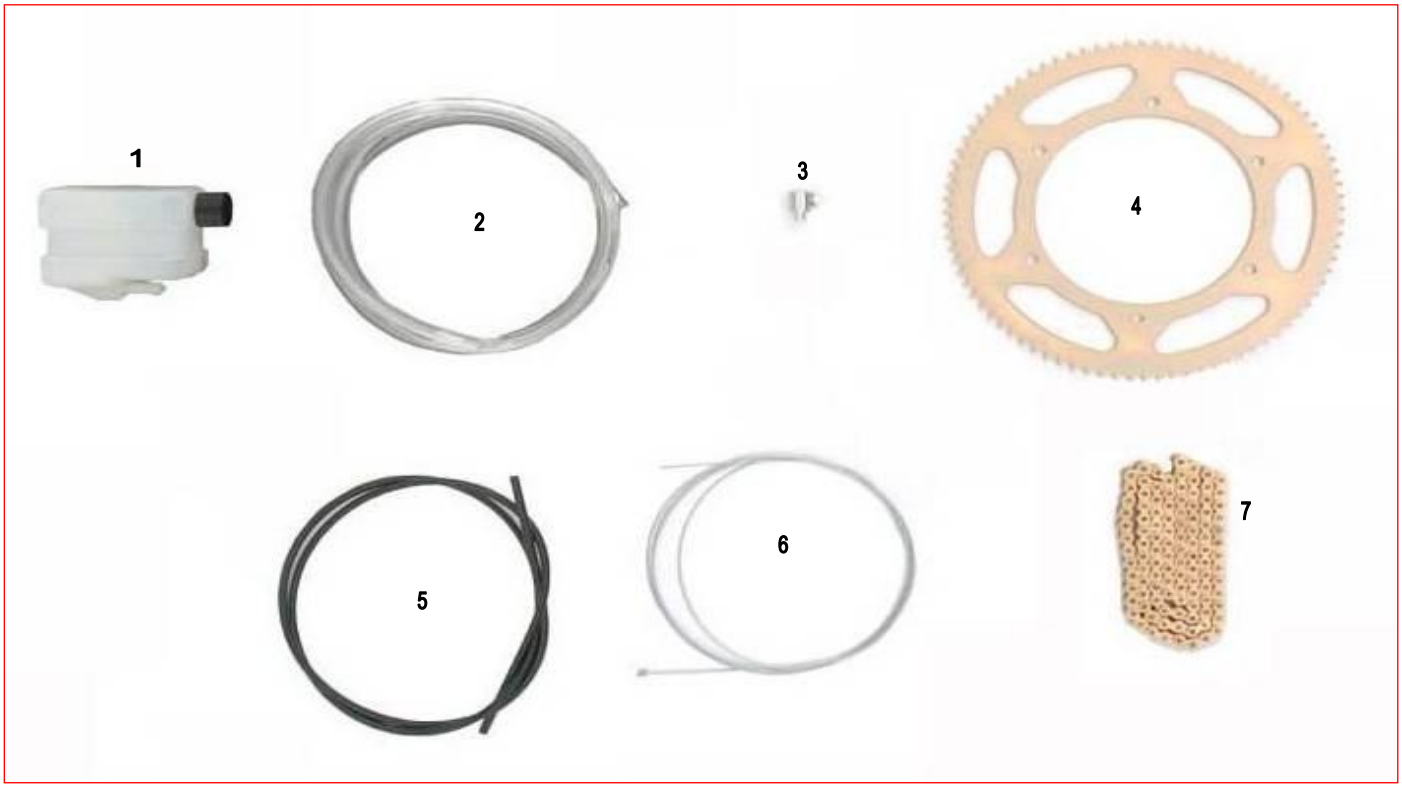

ES COD	DESCRIZIONE	ITEMS
CRG.50005	Pronto gara Mini/Baby	MINI/BABY Ready to race

ES	CRG.50005			QT.
1	AFS.00753		Tanica recupero>>>Recovery Tank	1
2	AMS.00516		Guaina>Sheater	1
3	AFS.00514		Morsetto>>>Holdfast	1
4	AFS.00171		Corona100>>>Axle Sprocket	1
5	AMS.00139		Tubo benzina>Fuel Pipe	1,5
6	AFS.00515		Filo>>>Cable	1
7	AFS.00614108		Catena100>>>Chain	1

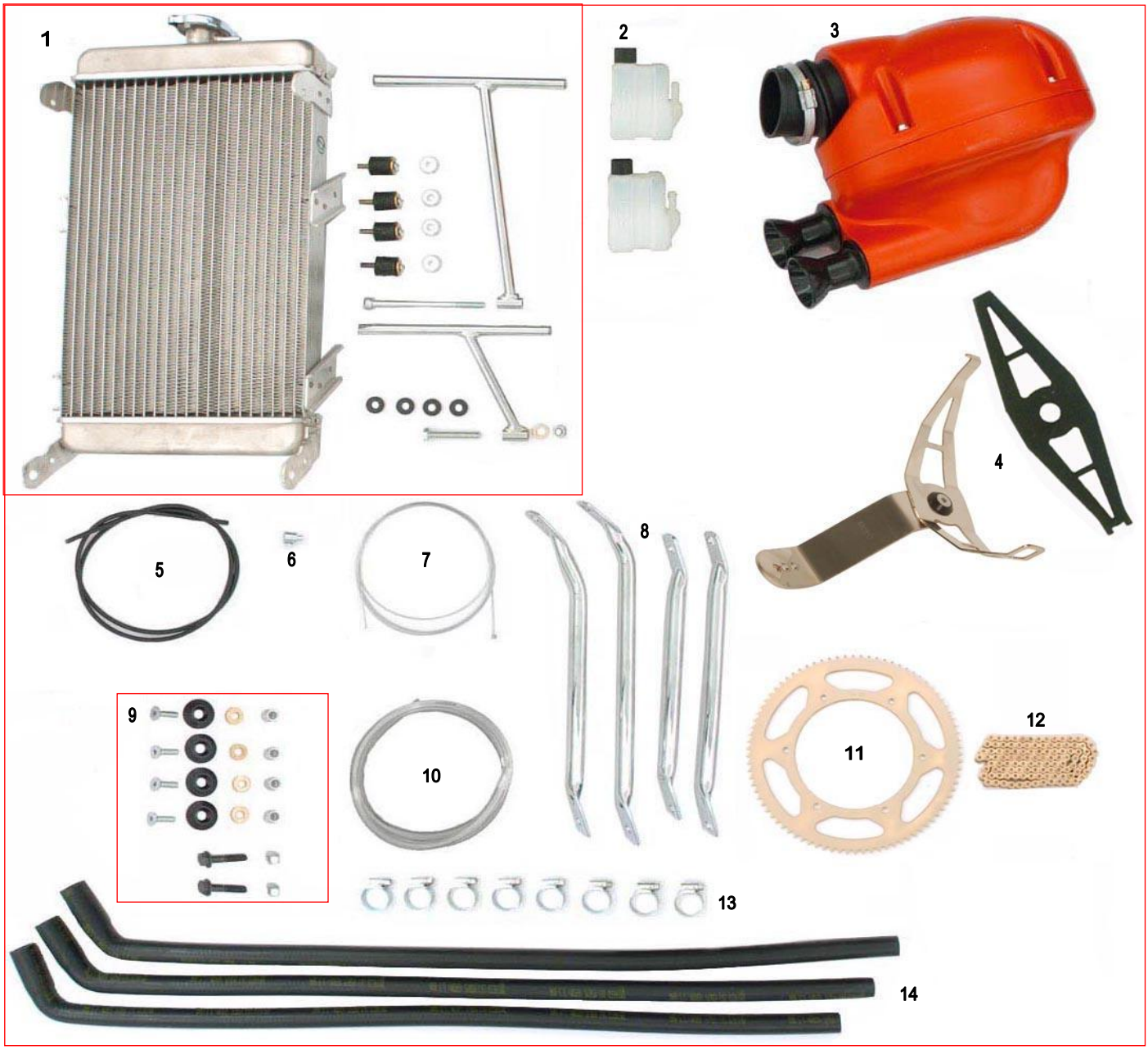

ES	COD	DESCRIZIONE	ITEMS
	CRG.50001	Prontogara KF1-KF2-KF3 D50	KF1-KF2-KF3 D50 ReadyToRaceKIT

ES	CRG.50001			
1	FM0.00785	Radiatore CRG Completo>CRG Radiator Complete		1
2	AFS.00753		Tanica recupero>Recovery Tank	2
3	AFS.00750		Silenziatore FL B23R>Air Filter	1
4	FK0.01933	Supporto Filtro Aria>CO>Air Filter Support		1
5	AMS.00516		Guaina>Sheater	1
6	AFS.00514		Morsetto>>>Holdfast	1
7	AFS.00515		Filo>>>Cable	1
8	FC0.01392 – FC0.01393	Rinforzi sedile>Seat Supports		4
9	FK0.00777		KIT Viti >SCREW KIT	1
10	AMS.00139		Tubo benzina>Fuel Pipe	1
11	AFS.00171		Corona100>>>Axle Sprocket	1
12	AFS.00614		Catena100>>>Chain	1
13	AFN.00776		Fascette in acciaio>Steel Band	8
14	AFS.00761		Curve tubo acqua>>>Water Pipe	3

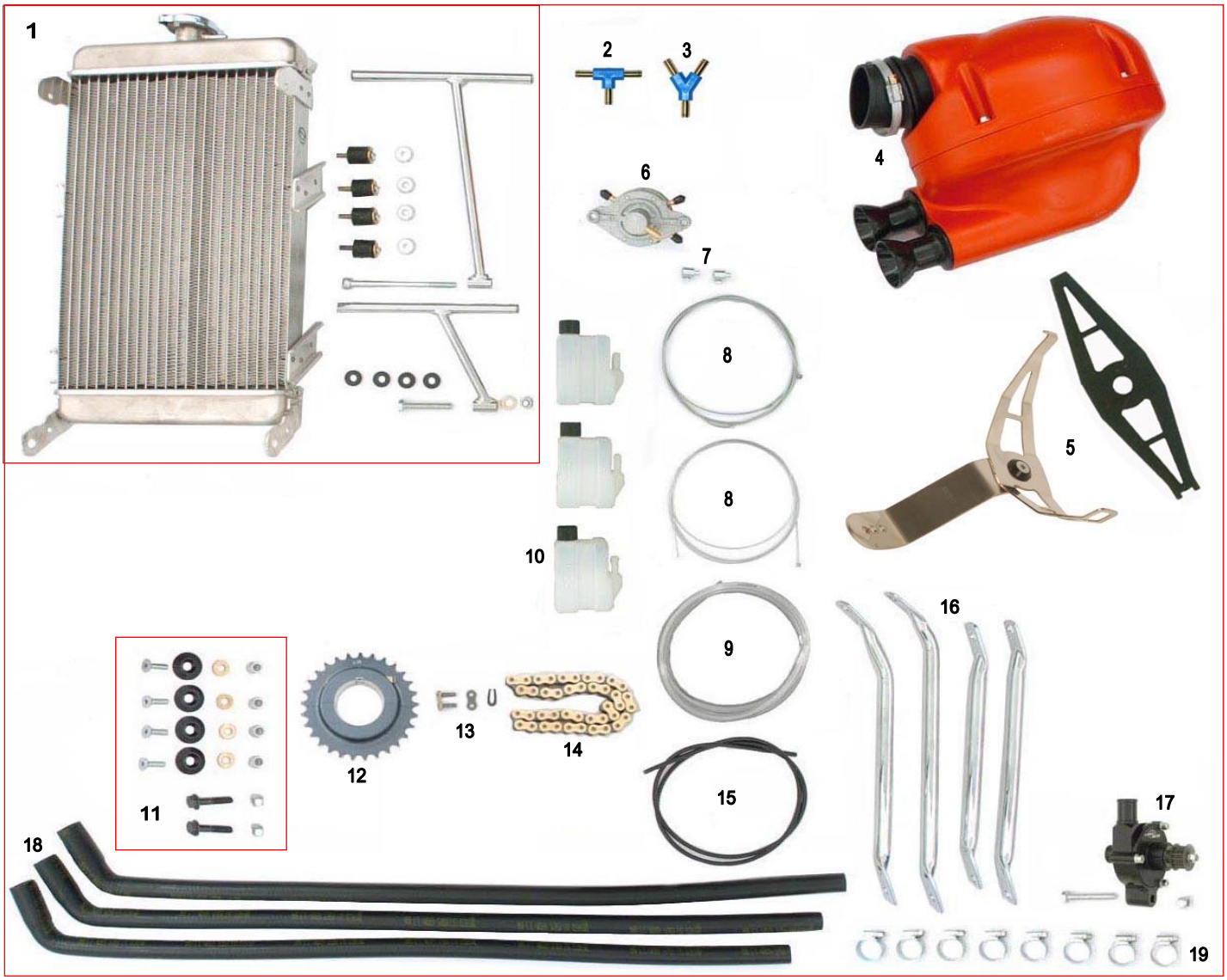

ES	COD	DESCRIZIONE	ITEMS	
	CRG.50002	Prontogara KZ	Ready to race KZ	
	CRG.50006	Prontogara 125 KZ2 Rad.Pent.	KF1-KF2-KF3 D50 ReadyToRace	
ES	CRG.50002			
1	FM0.00785	Radiatore CRG Completo>CRG Radiator Complete		1
2	AFS.01982	Raccordi T FESTO >>>T Fitting		1
3	AFS.01981	Raccordi Y FESTO>>>Y Fitting		1
4	AFS.00781	Silenziatore FL B30R>Air Filter		1
5	FK0.01933	Supporto Filtro Aria>CO>Air Filter Support		1
6	AFS.00782	Pompa benzina>>>Fuel Pump		1
7	AFS.00514	Morsetto>>>Holdfast		2
8	AFS.00515	Filo>>>Cable		2
9	AMS.00139	Tubo benzina>Fuel Pipe		3
10	AFS.00753	Tanica recupero>Recovery Tank		3
11	FK0.00777	KIT Viti >SCREW KIT		1
12	AFS.00797	Corona125>>>Axle Sprocket		1
13	AMS.00779	Maglia Congiunzione>Junktion Link		1
14	AMS.00671	Catena125>>>Chain		1
15	AMS.00516	Guaina>Sheater		2
16	FC0.01392 – FC0.01393	Rinforzi sedile>>Seat Supports		4
17	FM0.00762	Pompa acqua>>>Water Pump		1
18	AFS.00761	Curve tubo acqua>>>Water Pipe		3
19	AFN.00776	Fascette in acciaio>Steel Band		8

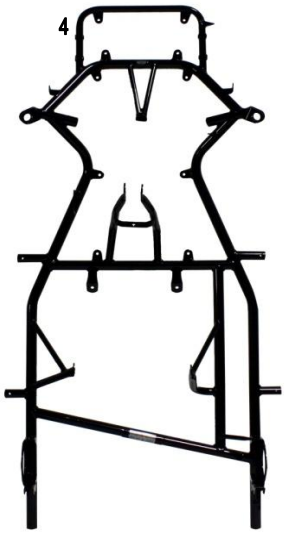

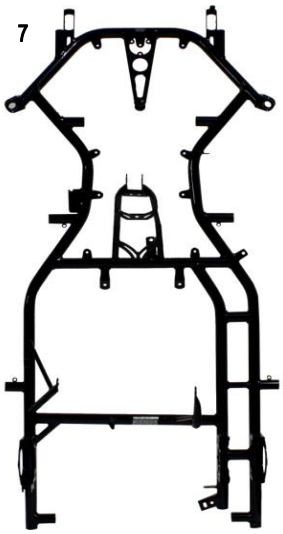

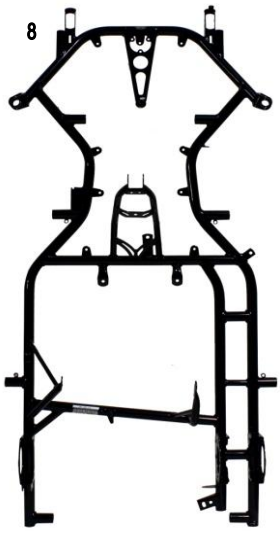

ES	COD	DESCRIZIONE	ITEMS
1	FVN.01783	Pedaliera Puffi	Foot Pedal Support Puffo
2	FV0.00048	Scocca PUFFO	PUFFO Frame
3	FVN.01157	Scocca Baby USA Nera 09	Baby USA Frame Black
4	FVN.02266	Scocca Mini 950 Big-Al USA	Mini Big-Al USA 950 Frame
4	FVN.02265	Scocca Mini 900 Big-Al USA	Mini Big-Al USA 900 Frame
5	FVN.02446	Scocca Mini 950 Hero Nera	Mini Hero Black Frame
6	FVN.02434	Scocca Mini 950 Na3	Mini Frame NA3
7	FVN.01610	Scocca KT1 MiniMax 101	KT1 MiniMax 101 Frame
8	FVN.02650	Scocca KT1 KF Nera	KTI Frame KF Black

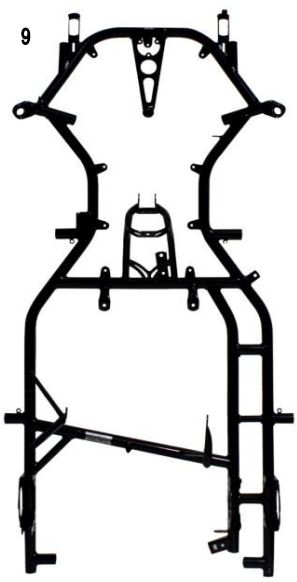

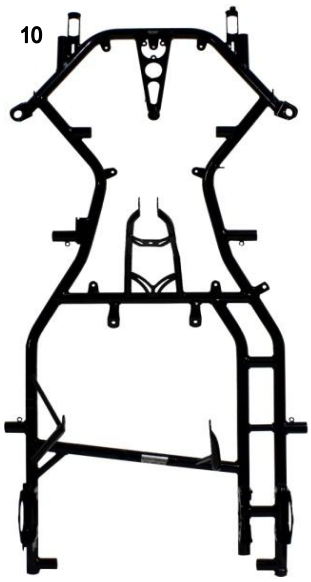

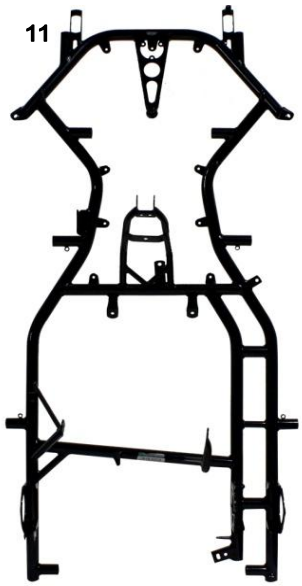

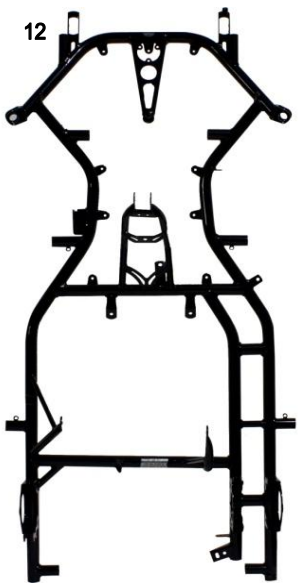

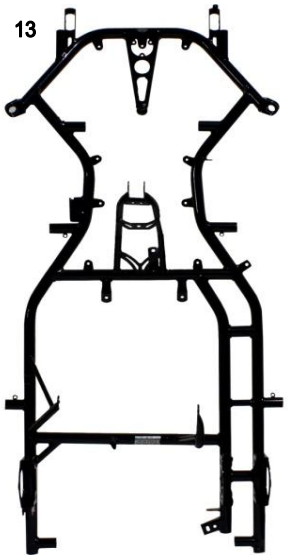

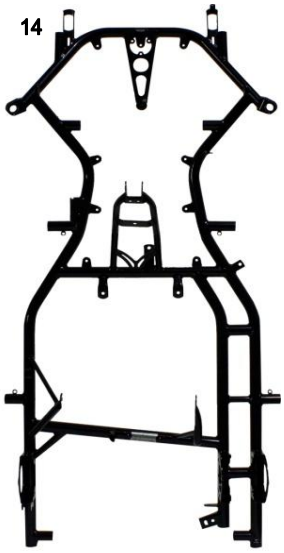

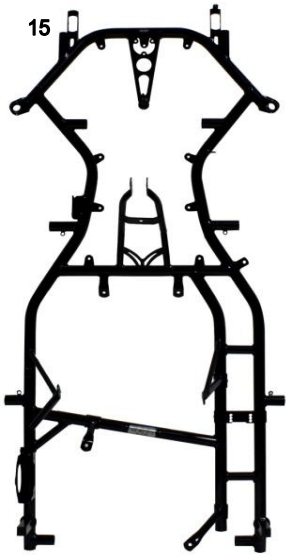

ES	COD	DESCRIZIONE	ITEMS
9	FVN.01163	Scocca Dark Knight	Dark Knight Frame
10	FVN.01192	Scocca Black Diamond STD 30/30	Black Diamond Frame Std 30/30
10	FVN.01236	Scocca Black Diamond STD 28/30	Black Diamond Frame Std 28/30
11	FVN.01508	Scocca Supersport 100/125	Supersport Frame 100/125
12	FVN.02646	Scocca RoadRebel 100/125	RoadRebel Frame 100/125
13	FVN.02647	Scocca Black Star 100/125	Black Star Frame 100/125
14	FVN.02775	Scocca Bad Boy 100/125	Bad Boy Frame 100/125
15	FVN.02277	Scocca DD2 CRG Evo 30/30	DD2 CRG Evo Frame 30/30
15	FVN.02693	Scocca DD2 CRG Evo 30/32	DD2 CRG Evo Frame 30/32
15	FVN.02854	Scocca DD2 CRG Evo 32/32	DD2 CRG Evo Frame 32/32

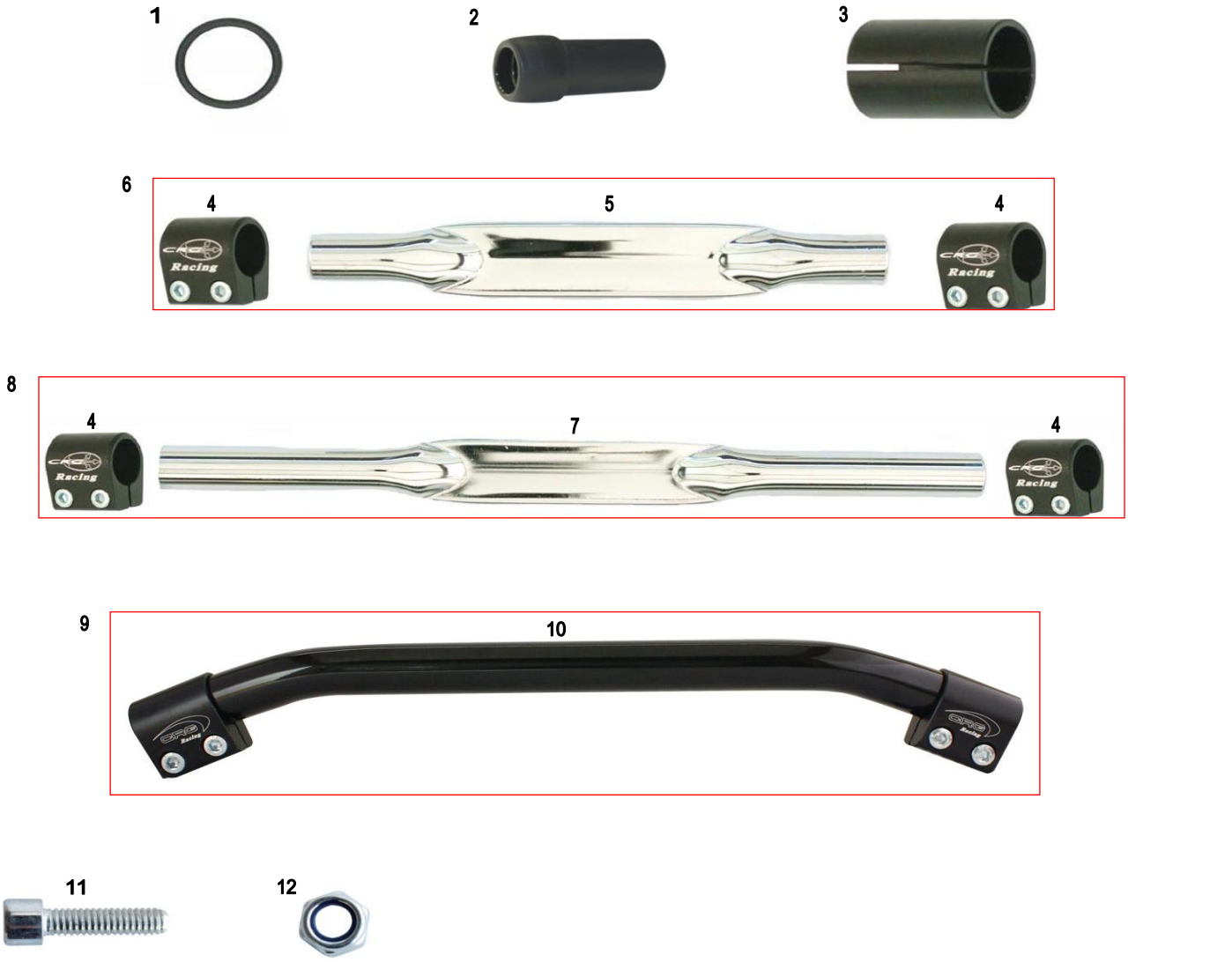

ES	COD	DESCRIZIONE	ITEMS
1	AFN.01440	Or Paraurti Laterale	Side Bumper Or
2	SL1.02860	Boccola Paraurti Laterale 2012	Side Bumper Bushing 2012
2	SL1.01349	Boccola Paraurti Laterale Corta	Side Bumper Bushing Short
3	FBN.00733	Riduzione Stabilizzatore xD25	Stab. Band Reduction D25
4	CRG.00731	Fascia Stabilizzatore Nera CRG Co	Stab. Band CRG Comp
4	FMN.00731	Fascia Stabilizzatore Nera Co	Stab. Band Comp
5	FC0.01093	Stabilizzatore E D30 L300 A	Front Stab. Bat D30 L300
5	FC0.00730	Stabilizzatore D25 L240 A	Front Stab. Bat D25 L240
6	CRG.01093	Stabilizzatore D30 L300 A CO	Front Stab. Bat D30 L300 CO
6	CRG.00730	StabilizzatoreE D25 L240 A CO	Front Stab. Bat D25 L240 CO
7	FC0.01092	Stabilizzatore D30 L480 P	Front Stab. Bat D30 L480
7	FC0.00729	Stabilizzatore D25 L430 P	Front Stab. Bat D25 L430
8	CRG.01092	Stabilizzatore D30 L480 P CO	Front Stab. Bat D30 L480 CO
8	CRG.00729	Stabilizzatore D25 L430 P CO	Front Stab. Bat D25 L430 CO
9	CRG.01658	Stabilizzatore Dark Knight Co	Dark Knight Stabilisator Co
10	FVN.01658	Stabilizzatore Dark Knight Ant.	Dark Knight Front Stabilisator
11	AFN.00732	Vite M 8x25 Cilindrica	M 8x25 Socket Head Screw
12	AFN.00160	Dado M 8 Autobloccante Basso	NUT M 8 LOW Self-locking

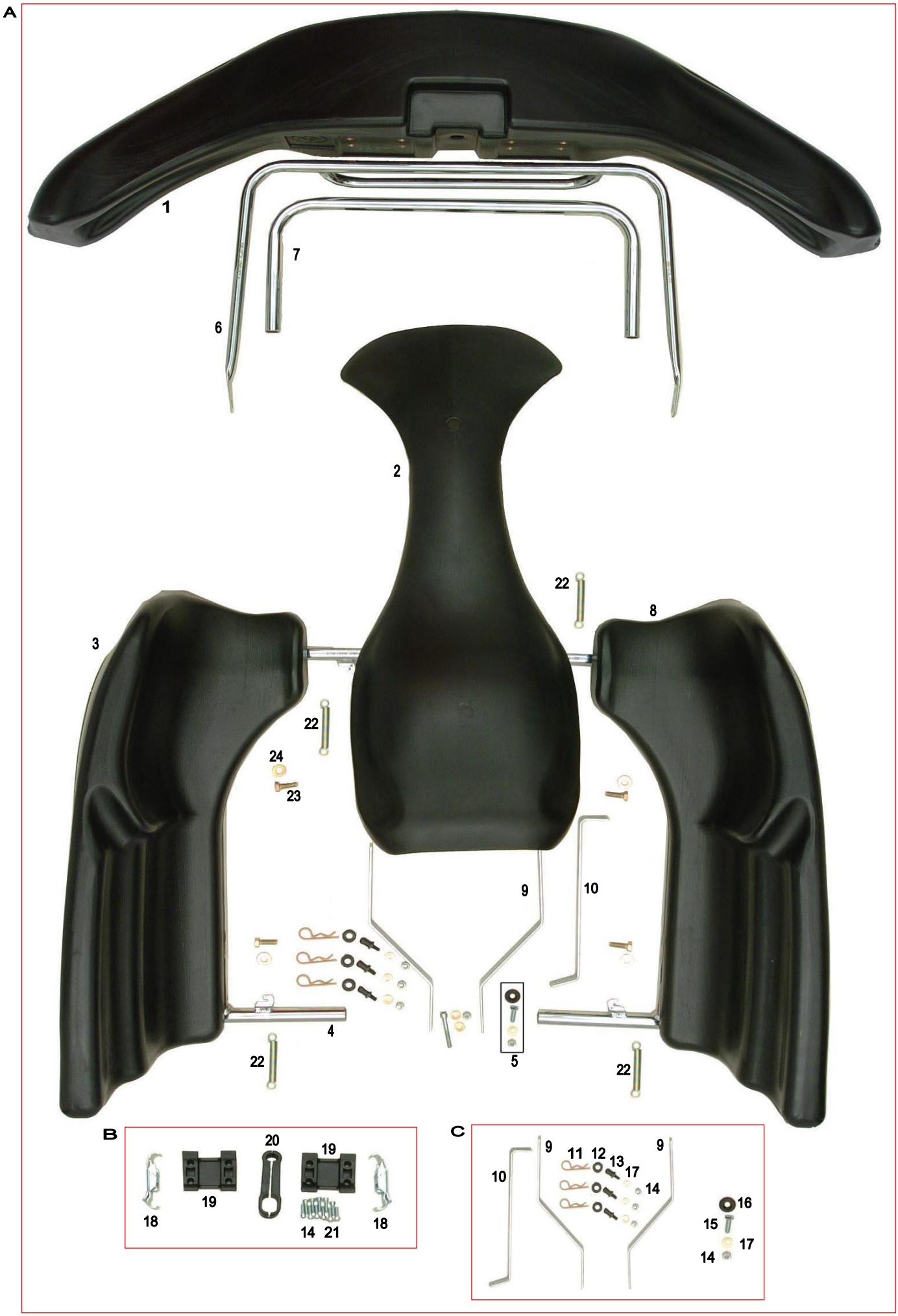
A
1
7
6
2
22
8
3
22
24
23
9
10
4
22
5
22
B
20
19
19
18
14
21
18
C
9
11
12
13
17
14
9
10
16
15
17
14

ES	COD	DESCRIZIONE	ITEMS
A	CRG.01084	Kit Carene NA2 Com. C/Attac.	NA2 Bodywork Kit Comp
A	FK0.01084LIGHT	Kit Carene NA2 Plastica Leggero	NA2 Plastic (Only) Bodywork Light Kit
B	AFS.01643	Kit Fissaggio Spoiler NA2	Front Spoiler NA2 Fix Set
C	FK0.01645	Kit Supporti Frontalino NA2	Front Fairing Sup. NA2 Kit
	FK0.01084	Kit Carene NA2 SoloPlast.	NA2 Bodywork Kit (Plastic)
	AFS.02912	Kit Adesivi CRG 2012	Sticker Kit CRG 2012
	AFS.02942	Kit Adesivi CRG 2012 Spoiler	Sticker Kit CRG 2012 Spiler
1	AFS.01617	Spoiler NA2	NA2 Front Spoiler
2	AFS.01616	Frontalino NA2	NA2 Front Fairing
3	AFS.1618S	Carenatura NA2 Sx	NA2 Side Fairing Left
3	AFS.1618SLIGHT	Carena Laterale NA2 Sx Leggera	NA2 Side Fairing Lf Light
4	SC0.0095S	Paraurti NA2 Sinistro	Side Bumper NA2 Left
4	SC0.0095SLIGHT	Paraurti Laterale NA2 Light Sx	Side Bumper Na2 (FL) Lf Light
5	SC0.0095D	Paraurti NA2 Destro	Side Bumper NA2 Right
5	SC0.0095DLIGHT	Paraurti Laterale NA2 Light Dx	Side Bumper Na2 (FL) Rh Light
6	SC0.01635	Paraurti Anteriore Sup.NA2	Front Bumper Bar Top NA2
7	SC0.01355	Parauti Anteriore Inf.NA2	Front Bumper Bar Below NA2
8	AFS.1618D	Carenatura NA2 Dx	NA2 Side Fairing Right
8	AFS.1618DLIGHT	Carena Laterale NA2 Dx Leggera	NA2 Side Fairing Rh Light
9	SC0.00098	Sup. Frontalino Sup.CRG	CRG Front Fairing Sup. Upper
10	SC0.01644	Sup. Frontalino Inf.CRG NA2	CRG NA2 Front Fairing Supp.
11	SZ0.00102	Spina Elast. Sup. Frontalino	Front Fairing Elastic Pin
12	AFS.00101	Gommino Sup. Frontalino	Front Fairing Rubber
13	SBN.00103	Perno Sup. Frontalino Nero	Front Fairing Pivot
14	AFN.00106	Dado M 6 Autobloccante Basso	Nut M 6 LOW Self-locking
15	AFN.00261	Vite M 6x 20 Svasata	M 6x 20 Count. Head Screw
16	SAN.00249	Rondella Svasata M 6 Nera	Washer M 6 Count. Black
17	AFN.00105	Rondella 6,5-12x1,5	Washer 6,5-12x1,5
18	AFS.00503	Gancio Rpido Spoiler (1 PZ.)	Fast Clamps For Spoiler (1)
19	AFS.00036	Placca Fix Spoiler NA Est.	Ext. Plate x Spoiler Fix NA
20	AFS.00504	Supporto Spoiler Plastica	Spoiler Plastic Support
21	AFN.00183	Vite M 6x 20 Cilindrica	M 6x 20 Socket Head Screw
22	FZ0.01439	Molla Paraurti Laterale	Side Bumper Spring
23	AFN.00909	Vite M 8x 20 Esagonale	M 8 x 20 Hex. Head Screw
24	AFN.00129	Rondella 8,5-17x1,5	Washer 8,5-17x1,5

SPESSORI / SPACER

1

2

ES	COD	DESCRIZIONE	ITEMS
1	FAN.00355	Spessore 6,5-18x14 Front. Nero	Spacer 6,5-18x14 Black
2	FAN.00273	Spessore 8 -18x14 Front. Nero	Spacer 8 -18x14 Black

A

B

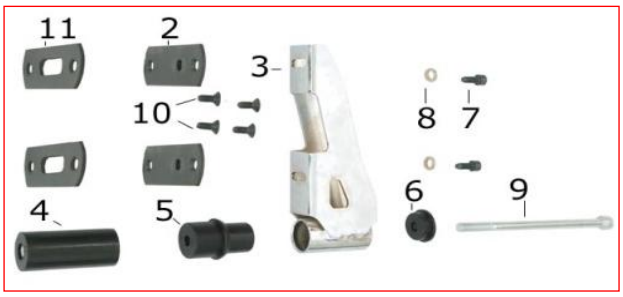

C=4+5+6+9

13

ES	COD	DESCRIZIONE	ITEMS
1	FAN.00355	Spessore 6,5-18x14 Front. Nero	Spacer 6,5-18x14 Black
2	FAN.00273	Spessore 8 -18x14 Front. Nero	Spacer 8 -18x14 Black
A	CRG.01701/32	Carena Post. NA9 Ø32 Comp.	Rear Fender NA9 Ø32 Comp
A	CRG.01701/30	Carena Post. NA9 Ø30 Comp.	Rear Fender NA9 Ø30 Comp
B	FK0.01698/30	Kit Supp .Carena Ppost.Ø30 Co	Rear Fairing Connec.KIT Ø30
B	FK0.01698/32	Kit Supp .Carena Ppost.Ø32 Co	Rear Fairing Connec.KIT Ø32
C	FKN.00491	Kit Vite P.Post Plast. (GOMM28)	Rear Fairing Kit(RUB. 28) Comp.
C	FKN.01712	Kit Vite P.Post Plast. (GOMM30)	Rear Fairing Kit(RUB. 30) Comp.
C	FKN.01711	Kit Vite P.Post Plast. (GOMM32)	Rear Fairing Kit(RUB. 32) Comp.
1	AFS.01701	Carenatura Posteriore NA9	Rear Fairing NA9
2	SBN.01709	Piastrina Carenatura Post.	RearFairing Plate
3	SC0.01698	Supporto Carenatura Post.	Rear Fairing Support
4	AFS.00115	Gommino Paraurti D28>D32	Rear Bumper Rubber D28>D32
4	AFS.01382	Gommino Paraurti D25>D30	Rear Bumper Rubber D25>D30
5	SAN.01711	Boccola C.Post.Int.Ø32 Nera	Int. Bushing D28>D32 Plast.
5	SAN.01712	Boccola C.Post.Int.Ø30 Nera	Int. Bushing D25>D30 Plast.
6	SAN.01710	Boccola Est. Carena Post	Rear Fairing Ext. Bushing
7	AFN.01585	Vite M 6x 16 Cilindrica	M 6x 16 Socket Head Screw
8	AFN.00105	Rondella 6,5-12x1,5	Washer 6,5-12x1,5
9	AFN.02476	Vite M 8x130 Cilindrica	M 8x130 Socket Head Screw
10	AFN.01717	Vite M 6x 16 Svasata	M 6x 16 CountersunkHeadScrew
11	AFS.01723	Guarnizione Carena Post.	Rear Fairing Gasket
12	SAN.00249	Rondella Svasata M 6 Nera	Washer M 6 Count. Black
	AFS.01904	Adesivo Portanumero Post	Rear Fender Sticker
13	SC0.00282	Paraurti Anteriore Puffo	Front Bumper Puffo

A

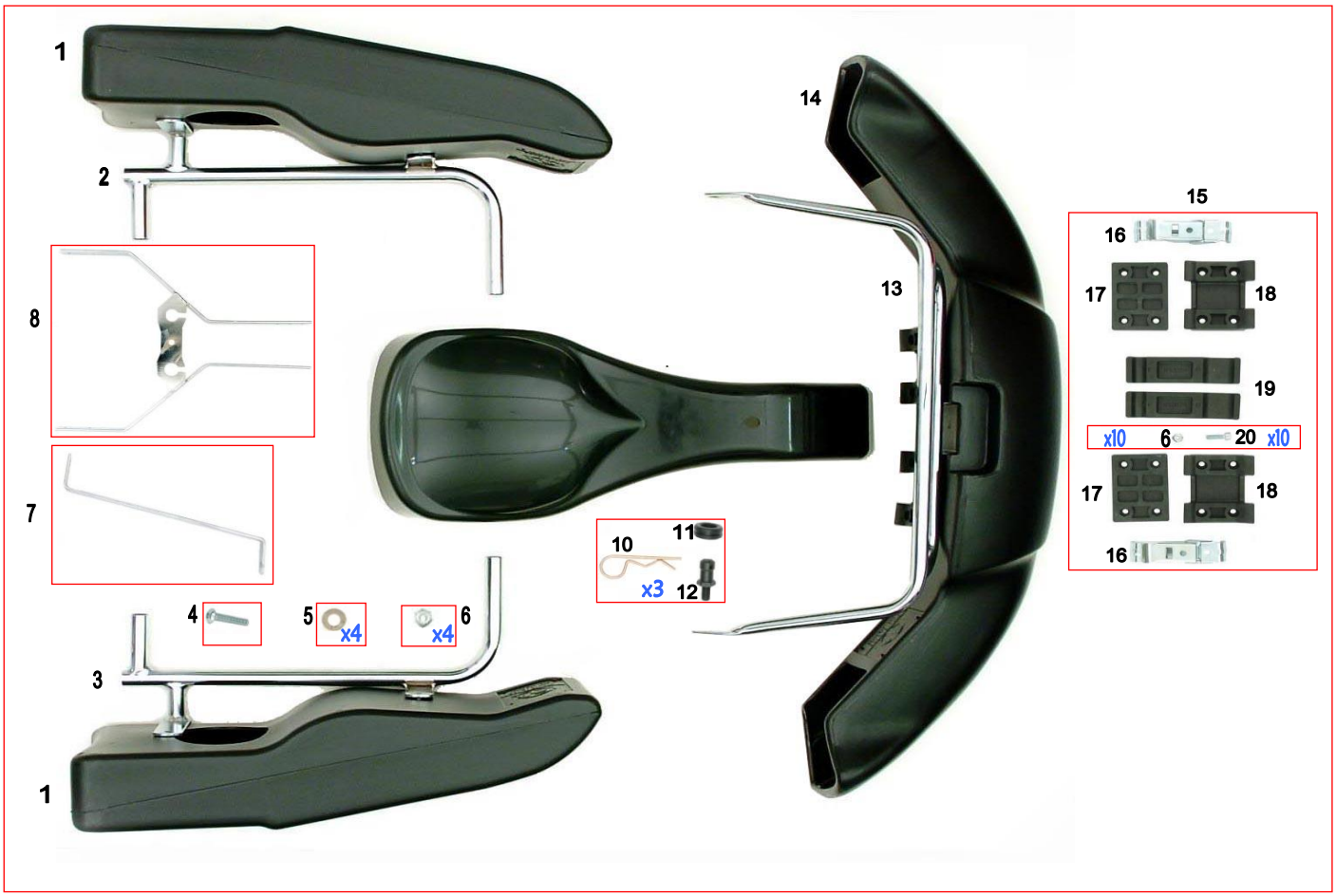

ES	COD	DESCRIZIONE	ITEMS
A	CRG.01646	Kit Carene NA Mini c/attacchi	Bodywork Set MINI NA w/connect
1	AFS.00757	Carenatura NEWAGE	Side Fairing NA
2	SC0.1540S	Paraurti Lat. Mini NA SX	Side Fender Mini NA LF
3	SC0.1540D	Paraurti Lat. Mini NA DX	Side Fender Mini NA RH
4	AFN.02144	Vite M 6x 20 Bombata	M 6x 20 Convex Head Screw
5	AFN.00105	Rondella 6,5-12x1,5	Washer 6,5-12x1,5
6	AFN.00264	Dado M 6 Autobloccante Alto	NutM 6 High Self-Locking
7	SC0.01548	Sup. Frontlaino Inf.NA/Inf.XL	Front Fairing Sup. Bel. NA/XL
8	SC0.01547	Sup. Pulsantiera-Front. NA	Front Fairing /Console Supna
9	AFS.00759	Frontalino New Age	Front Fairing New Age
10	SZ0.00102	Spina Elastica Sup. Front.	Front Fairing Elastic Pin
11	AFS.00101	Gommino Supporto Front.	Front Fairing Rubber
12	SBN.00103	Perno Sup. Frontalino Nero	Front Fairing Pivot
13	SC0.00557	Parauto Ant. Mini NA-Puffo	NA Mini-Puffo Front Fender
14	AFS.00758	Spoiler New Age	Front Spoiler New Age
15	AFS.01551	Kit Fis. Spoiler NA (mini)	NA mini Spoiler Connect. Kit
16	AFS.00503	Gancio Rapido Spoiler (1 PZ.)	Fast Clamps For Spoiler (1)
17	AFS.00034	Placca Fix Spoiler NA Int.	Plastic Int.Plate NA Spoiler
18	AFS.00036	Placca Fix Spoiler NA Est.	Plastic Ext.Plate NA Spoiler
19	AFS.00504	Supporto Spoiler Plastica	Spoiler Plastic Support
20	AFN.00478	Vite M 6x 25 Cilindrica	M 6x 25 Socket Head Screw
	AFS.01563	Kit Adesivi New Age	Stickers Kit New Age
	AFS.01895	Kit Adesivi New Age Spoiler	Front Spoiler NA Stickers
	FK0.01562	Kit Supporti Frontalino NA	Front Fairing NA Support Kit
	FK0.01646	Kit Carene NA Mini Plastica	Fairings Kit NA Mini Plastic

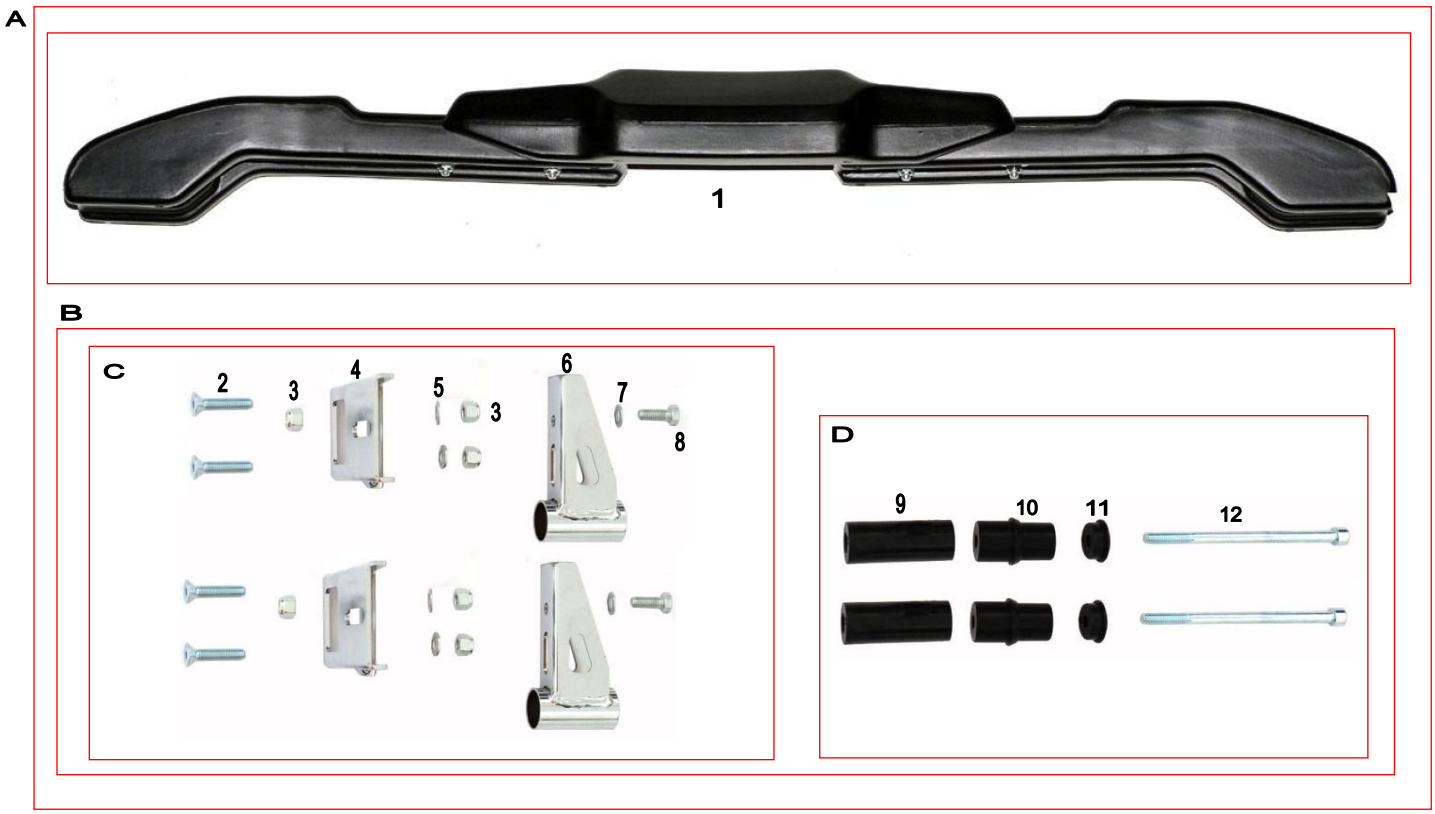

ES	COD	DESCRIZIONE	ITEMS
A	FM0.01176	Carena Post KG Mini x D28 Co	Rear FairingKG Mini x D28 Co
A	FM0.01191	Carena Post KG Mini x D25 Co	Rear FairingKG Mini x D25 Co
A	FM0.01341	Carena Post KG Mini x D30 Co	Rear FairingKG Mini x D30 Co
B	FK0.0211828	Kit Supp.Car.Mini C/Viti Par	Rear Plas. Bumper Clamps Kit
B	FK0.0211825	Kit Supp.Car. Puffo C/Viti Par	Rear Plas. Bumper Clamps Kit
C	FK0.02118	Kit Supp. Carena P.Mini KG	Rear Fairing Mini KG Supp.Kit
D	FKN.02469	Kit Vite Par. Post (D21>D25)	Rear Fairing Kit (D21>D25) Co
D	FKN.00562	Kit Vite Par. Post (D23>D28)	Rear Fairing KIT(D23>D28) Co
1	AFS.01176	Carenatura Post. Mini KG	Rear Fairing Mini KG
2	AFN.00265	Vite M 8x 35 Svasata	M 8x 35 Countersunk Head Screw
3	AFN.00128	Dado M 8 Autobloccante Alto	Nut M 8 High Self-Locking
4	SC0.01191	Piastra Carena Post.Mini KG	Rear Fairing Mini KG Plate
5	AFN.00129	Rondella 8,5-17x1,5	Washer 8,5-17x1,5
6	SC0.01341	Supporto Carena Post.Mini KG	Rear Fairing Mini KG Support
7	AFN.01156	Rondella 8,5-25x1,5	Washer 8,5-25x1,5
8	AFN.00909	Vite M 8x 20 Esagonale	M 8 x 20 Hex. Head Screw
9	AFS.01381	Gommino Paraurti D21>D25	Rear Bumper Rubber D21>D25
9	AFS.00563	Gommino Paraurti D23>D28	Rear Bumper Rubber D23>D28
10	SAN.02133	Boc. Int.D21>D25 Car. Post.Pl.	Int. Bushing D21>D25 Rear Fen.
10	SAN.02469	Boc. Int.D21>D25 Car. Pl. Lunga	Int. Bushing D21>D25 Long R.Fen.
10	SAN.02055	Boc. Int.D23>D28 Car. Post. Pl	Int. Bushing D23>D28 Rear Fen.
10	SAN.02263	Boc. Int.D23>D28 Car. P.Pl USA	Int. Bushing D23>D28 x Fen. USA
11	SAN.01710	Boccola Est. Carena Post	Rear Fairing EXT.L Bushing
12	AFN.02476	Vite M 8x130 Cilindrica	M 8x130 Socket Head Screw

1

2

3

4

5

6

ES	COD	DESCRIZIONE	ITEMS
1	FK0.00921	Kit Adesivi Numero (0/9-10pz)	Numbers Sticker Kit (0/9-10pcs)
	REPCORSENR.**	Adesivo Numero Race Nr.**	Numbers Sticker Race Nr.**
	AFS.00921NR.0	Adesivo Numero STD NR.0	Number Sticker STD NR.0
	AFS.00921NR.1	Adesivo Numero STD NR.1	Number Sticker STD NR.1
	AFS.00921NR.2	Adesivo Numero STD NR.2	Number Sticker STD NR.2
	AFS.00921NR.3	Adesivo Numero STD NR.3	Number Sticker STD NR.3
	AFS.00921NR.4	Adesivo Numero STD NR.4	Number Sticker STD NR.4
	AFS.00921NR.5	Adesivo Numero STD NR.5	Number Sticker STD NR.5
	AFS.00921NR.6	Adesivo Numero STD NR.6	Number Sticker STD NR.6
	AFS.00921NR.7	Adesivo Numero STD NR.7	Number Sticker STD NR.7
	AFS.00921NR.8	Adesivo Numero STD NR.8	Number Sticker STD NR.8
	AFS.00921NR.9	Adesivo Numero STD NR.9	Number Sticker STD NR.9
2	AFS.01904	Adesivo Porta Numero Post.	Rear Fender Sticker
3	AFS.00244	Fasc. Tabella Portanumero	Number Plate Band(1)
4	AFS.00242	Tabella Portanumero	Number Plate
	AFS.01333	Kit Adesivi Decorazione	Sticker Kit Decoration
5	AFS.02778	Adesivo Pianale CRG	Floor Tray Sticker CRG
6	AFS.02933	Adesivo Pianale 2012	Floor Tray Sticker CRG 2012

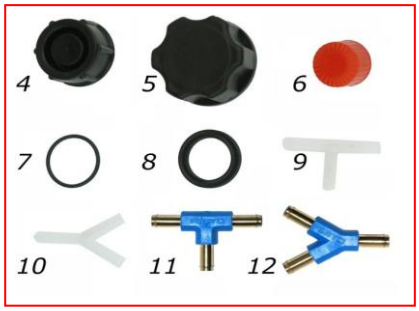

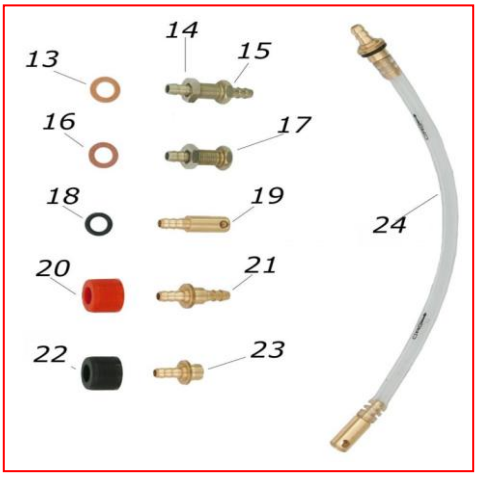

ES	COD	DESCRIZIONE	ITEMS
1	FM0.00138	Tanica LT.8,5 100cc Comp.	Fuel Tank LT.8,5 100 Comp.
1	FM0.00322	Tanica LT.8,5 125cc Comp.	Fuel Tank LT.8,5 125 Comp.
2	AFS.02766	Tanica LT.3,5 MINI 2011 Comp.	Fuel Tank LT.3,5 Mini 2011 Comp.
3	FM0.00858	Tanica LT.5 Comp.	Fuel Tank LT.5 Comp.
4	AFS.01383	Tappo Tanica Mini Nero	Fuel Tank Mini BlackCap
5	AFS.00143	Tappo Tanica	Fuel Tank Cap
6	AFS.01384	Tappo Tanica Mini Rosso	Fuel Tank Mini Red Cap
7	AFN.00140	OR Tanica	Fuel Tank Gasket
8	AFN.00144	Guarnizione Tappo Tanica	Ring > Fuel Tank Cap
9	AFS.00783	Raccordo T Benzina	Fuel Pipe Fitting T
10	AFS.00941	Raccordo Y Benzina	Fuel Pipe Fitting Y
11	AFS.01982	Raccordo T Festo	T-Fitting Festo
12	AFS.01981	Raccordo Y Festo 6mm	Y-Fitting Festo 6mm
13	AFN.01380	Rondella Rame 10 -16x1	Copper Washer 10 -16x1
14	AFS.00325	Dado Raccordo Tanica	Fuel Tank >Nut for Fitting
15	AFS.00571	Raccordo Pescante Tanica Mini	Fuel Tank Mini Catch Fitting
16	AFN.00323	Rondella Fibra 10 -16x1	Fiber Washer 10-16x1
17	SZ0.00324	Rac. Ritorno Tanica 125/NOL	Bleeder Fitting NOL/125
18	AFN.01379	OR Raccordo Tanica	Fuel Tank Fitting Gasket
19	SL1.00147	Pescante	Fuel Tank Catch
20	AFS.00142	Tappino Pescante Tanica	Fuel Research Fitting Tap
21	SL1.00149	Raccordo Pescante Tanica	Fuel Tank Catch Fitting
22	AFS.00141	Tappino Sfiato Tanica (nero)	Cap>Fuel Tank Pressure Valve
23	SZ0.00151	Raccordo Sfiato 100/125	Bleeder Fitting 100/125
24	AMS.00139	Tubo Benzina al Mt.	Fuel Pipe x Meter
25	AFS.00587	Ferma Tanica	Tank Holder
26	AFS.00753	Tanica Recupero c/tappo	Recovery Tank w/cap
	AFS.00589	Fascetta Tubo Benzina	Fuel Pipe Band
27	AFS.01016	Filtro Benzina	Fuel Filter
	AFS.01208	Kit Adesivi Tanica 8,5 DX+SX	Tank Sticker Kit LT.8,5 RH+LF

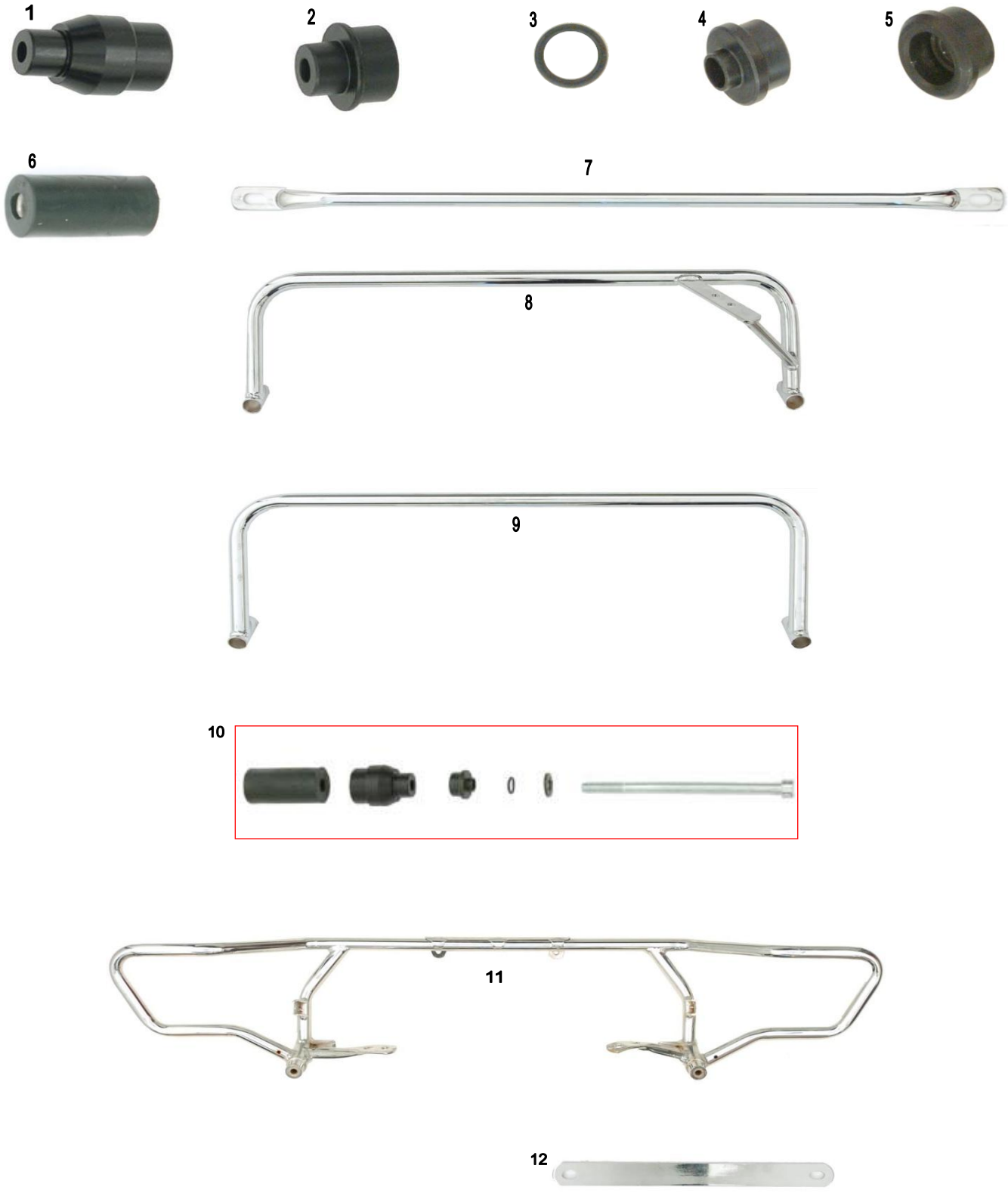
1
2
3
4
5
6
7
8
9
10
11
12
A
14
14
15
13
13
16
16

ES	COD	D E S C R I Z I O N E	I T E M S
1	SAN.02592	Boccola Int.D23>D28 Par. Fe	Int.BushingD23>D28 Rear Bum.
1	SAN.01143	Boccola Int.D25>D30 Par. Fe	Int.Bushing D25>D30 Rear Bum.
1	SAN.00117	Boccola Int.D28>D32 Par. Fe	Int.Bushing D28>D32 Rear Bum.
2	SAN.01219	Boccola Int.D21>D25 Par. Fe Co	Int.Bushing D21>D25 Rear Bum.SH
2	SAN.01193	Boccola Int.D23>D28 Par. Fe Co	Int.Bushing D23>D28 Rear Bum. SH
2	SAN.01195	Boccola Int.D25>D30 Par. Fe Co	Int.Bushing D25>D30 Rear Bum.SH
2	SAN.01194	Boccola Int.D28>D32 Par. Fe Co	Int.Bushing D28>D32 Rear Bum.SH
3	AFN.00116	OR Paraurti	O-RING Rear Bumper
4	SBN.00119	Boccola Est. Fe Par.Post.	Bumper External Bushing Iron
5	SAN.01147	Boccola Est. Al Par.Post.	Bumper External Bushing Alu
6	AFS.01381	Gommino Paraurti D21>D25	Rear Bumper Rubber D21>D25
6	AFS.00563	Gommino Paraurti D23>D28	Rear Bumper Rubber D23>D28
6	AFS.01382	Gommino Paraurti D25>D30	Rear Bumper Rubber D25>D30
6	AFS.00115	Gommino Paraurti D28>D32	Rear Bumper Rubber D28>D32
7	FC0.00728	Barra Paraurto Post.55 STD	Rear Bumper 55 BAR Bottom
7	FC0.00856	Barra Paraurto Post.58 STD	Rear Bumper 58 BAR Bottom
7	FC0.00392	Barra Paraurto Post.61 STD	Rear Bumper 61 BAR Bottom
7	FC0.00112	Barra Paraurto Post.61,5 STD	Rear Bumper 61,5 BAR Bottom
7	FC0.00854	Barra Paraurto Post.63 STD	Rear Bumper 63 BAR Bottom
7	FC0.01453	Barra Paraurto Post.M.M.R.	Rear Bumper M.M.R.BAR Bottom
10	FC0.01289	Paraurto Post. 55 Con Staffa	Rear Bumper 55 W/Hanger
10	FC0.01288	Paraurto Post. 58 Con Staffa	Rear Bumper 58 W/Hanger
10	FC0.01415	Paraurto Post. 59 Con Staffa	Rear Bumper 59 W/Hanger
10	FC0.01287	Paraurto Post. 62 Con Staffa	Rear Bumper 62 W/Hanger
11	FC0.00727	Paraurto Posteriore 55 STD	Rear Bumper 55 STD
11	FC0.00855	Paraurto Posteriore 58 STD	Rear Bumper 58 STD
11	FC0.01414	Paraurto Posteriore 59 STD	Rear Bumper 59 STD
11	FC0.00391	Paraurto Posteriore 61 STD	Rear Bumper 61 STD
11	FC0.00109	Paraurto Posteriore 62 STD	Rear Bumper 62 STD
11	FC0.00853	Paraurto Posteriore 63 STD	Rear Bumper 63 STD
12	FKN.00960	Kit Vite Par. Post Fe(GOMM30)	Rear Bumper Kit (Rubber 30)Comp
12	FKN.00113	Kit Vite Par. Post Fe(GOMM32)	Rear Bumper Kit (Rubber 32)Comp
	AFN.00108	Rondella 8,5-18x2	Washer 8,5-18x2
	AFS.00115	Gommino Paraurti D28>D32	Rear Bumper Rubber D28>D32
	AFN.00116	OR Paraurti	O-RING Rear Bumper
	SAN.00117	Boccola Int.D28>D32 Par.Fe	Long Int.Bushing xD32*BLACK
	SBN.00119	Boccola Est. Fe Par. Post	Bumper Externak Bushing Iron
	AFN.02476	Vite M 8x130 Cilindrica	M 8x130 Socket Head Screw
13	FC0.01452	Paraurto Posteriore M.M.R.	Rear Bumper M.M.R.
14	FC0.01454	Tirante Paraurto Post.M.M.R.	Rear Bumper M.M.R. Tightener
15	SL1.01541	Rullo Paraurto Post.New Age	Rear Bumper Roller New Age
16	SC0.01552	Sup. Rullo Par.Post.NewAge	Rear Bumper Roller Support N.A.
17	SC0.01542	Barra Ponte Sup.Par.New Age 59	Rear B.Bridge Top Bar NewAge59
18	FM0.1543D	Attacco Par.Post.NewAge DX	Rear Bumper Connection N.A.RH
18	FM0.1543S	AttaccoPar.Post.NewAge SX	Rear Bumper Connection N.A.LF
A	FM0.01544	Par. Post.NewAge 59 Comp.	Rear Bumper NEW AGE 59 Comp

ES	COD	DESCRIZIONE	ITEMS
	FL1.00395	Assale 25 Puffo H	Axle 25 Puffo H
	FBN.01530	Assale 30 Mini/Baby NewAge M	Axle 30 Mini/Baby NewAge M
	FBN.01530H	Assale 30 Mini/Baby NewAge H	Axle 30 Mini/Baby NewAge H
	FBN.01530SS	Assale 30 Mini/Baby NewAge S	Axle 30 Mini/Baby NewAge S
	FBN.00737	Assale 30 Miniclass L 900 NR	Axle 30 Miniclass L 900 NR
	FBN.00446	Assale 40 STD Nero M	Axle 40 STD Black M
	FBN.01663K	Assale 40 DD2 1040 K	Axle 40 DD2 1040 K
	FBN.01663	Assale 40 DD2 1040 M	Axle 40 DD2 1040 M
	FBN.01663S	Assale 40 DD2 1040 S	Axle 40 DD2 1040 S
	FBN.00155	Assale 50 M20 STD Nero 1020	Axle 50 M20 STD Black 1020
	FBN.00155.1040	Assale 50 M20 STD Nero 1040	Axle 50 M20 STD Black 1040
	FBN.00155.1060	Assale 50 M20 STD Nero 1060	Axle 50 M20 STD Black 1060
	FBN.01313	Assale 50 M20 STD Nero R 1040	Axle 50 M20 STD Black R 1040
	FBN.01313.1020	Assale 50 M20 STD Nero R 1020	Axle 50 M20 STD Black R 1020
	FBN.01313.1060	Assale 50 M20 STD Nero R 1060	Axle 50 M20 STD Black R 1060
	FBN.01309	Assale 50 S20 STD Nero 1020	Axle 50 S20 STD Black 1020
	FBN.01309.1040	Assale 50 S20 STD Nero 1040	Axle 50 S20 STD Black 1040
	FBN.01309.1060	Assale 50 S20 STD Nero 1060	Axle 50 S20 STD Black 1060
	FBN.01316	Assale 50 S20 STD Nero R 1040	Axle 50 S20 STD Black R 1040
	FBN.01316.1060	Assale 50 S20 STD Nero R 1060	Axle 50 S20 STD Black R 1060
	FBN.01311	Assale 50 S25 STD Nero 1020	Axle 50 S25 STD Black 1020
	FBN.01311.1040	Assale 50 S25 STD Nero 1040	Axle 50 S25 STD Black 1040
	FBN.01311.1060	Assale 50 S25 STD Nero 1060	Axle 50 S25 STD Black 1060
	FBN.01318	Assale 50 S25 STD Nero R 1040	Axle 50 S25 STD Black R 1040
	FBN.01318.1060	Assale 50 S25 STD Nero R 1060	Axle 50 S25 STD Black R 1060
	FBN.01684	Assale 50 M25 STD Nero	Axle 50 M25 STD Black
	FBN.R1684	Assale 50 M25 STD Nero R	Axle 50 M25 STD Black R
	FBN.155T1	Assale 50 T1 Nero	Axle 50 T1 Black
	FBN.155T2	Assale 50 T2 Nero 1020	Axle 50 T2 Black 1020
	FBN.155T2.1040	Assale 50 T2 Nero 1040	Axle 50 T2 Black 1040
	FBN.155T2.1060	Assale 50 T2 Nero 1060	Axle 50 T2 Black 1060
	FBN.155T3	Assale 50 T3 Nero	Axle 50 T3 Black
	FBN.155T4	Assale 50 T4 Nero 1020	Axle 50 T4 Black 1020
	FBN.155T4.1040	Assale 50 T4 Nero 1040	Axle 50 T4 Black 1040
	FBN.155T4.1060	Assale 50 T4 Nero 1060	Axle 50 T4 Black 1060
	FBN.155T5	Assale 50 T5 Nero 1020	Axle 50 T5 Black 1020
	FBN.155T5.1040	Assale 50 T5 Nero 1040	Axle 50 T5 Black 1040
	FBN.155T5.1060	Assale 50 T5 Nero 1060	Axle 50 T5 Black 1060
	FBN.155T6.1060	Assale 50 T6 Nero 1060	Axle 50 T6 Black 1060
	FBN.155T7	Assale 50 T7 Nero 1020	Axle 50 T7 Black 1020
	FBN.T1RIN	Assale 50 T1 Nero R	Axle 50 T1 Black R
	FBN.T2RIN	Assale 50 T2 Nero R 1020	Axle 50 T2 Black R 1020
	FBN.T2RIN.1060	Assale 50 T2 Nero R 1060	Axle 50 T2 Black R 1060
	FBN.T3RIN	Assale 50 T3 Nero R	Axle 50 T3 Black R
	FBN.T4RIN	Assale 50 T4 Nero R 1040	Axle 50 T4 Black R 1040
	FBN.T4RIN.1060	Assale 50 T4 Nero R 1060	Axle 50 T4 Black R 1060
	FBN.T5RIN	Assale 50 T5 Nero R 1040	Axle 50 T5 Black R 1040
	FBN.T5RIN.1060	Assale 50 T5 Nero R 1060	Axle 50 T5 Black R 1060
	FBN.T6RIN	Assale 50 T6 Nero R	Axle 50 T6 Black R
	FBN.T7RIN	Assale 50 T7 Nero R	Axle 50 T7 Black R

A

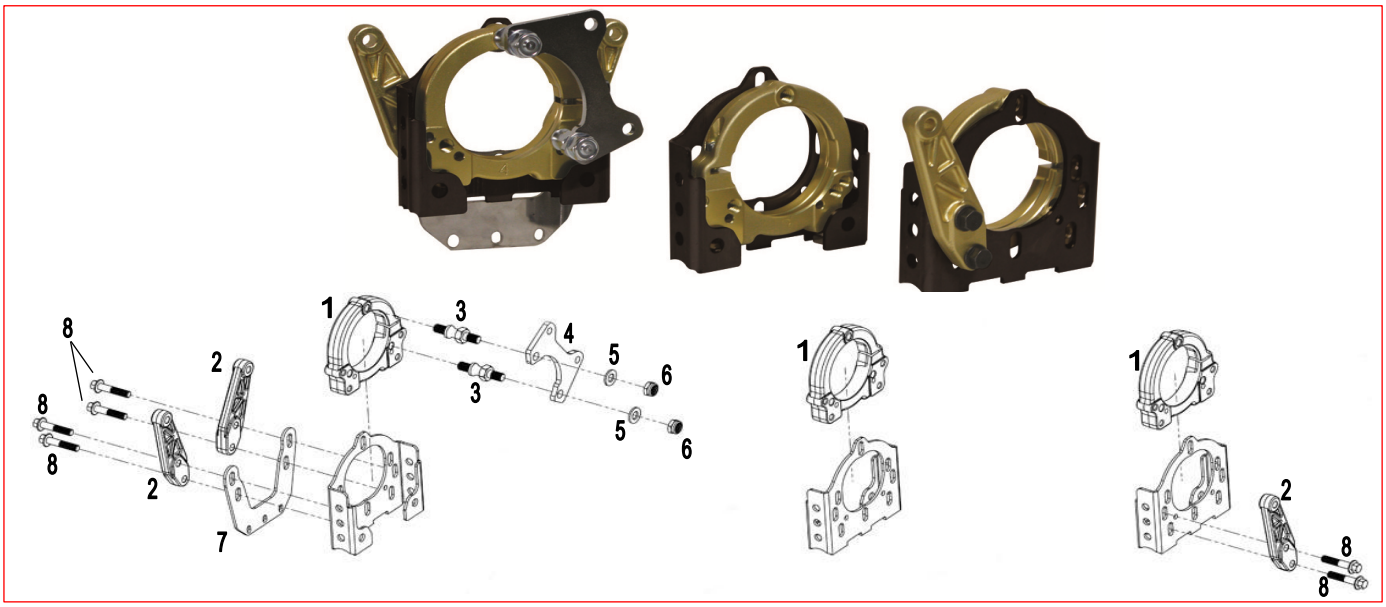

B

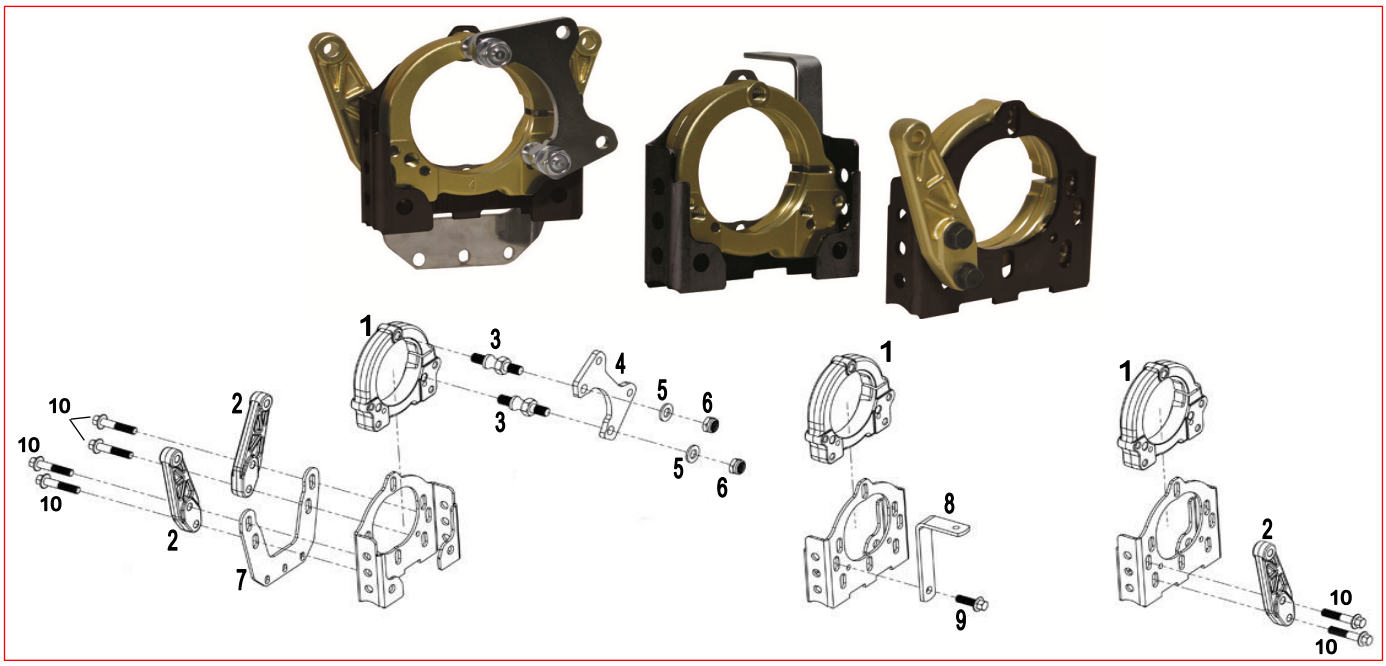

C

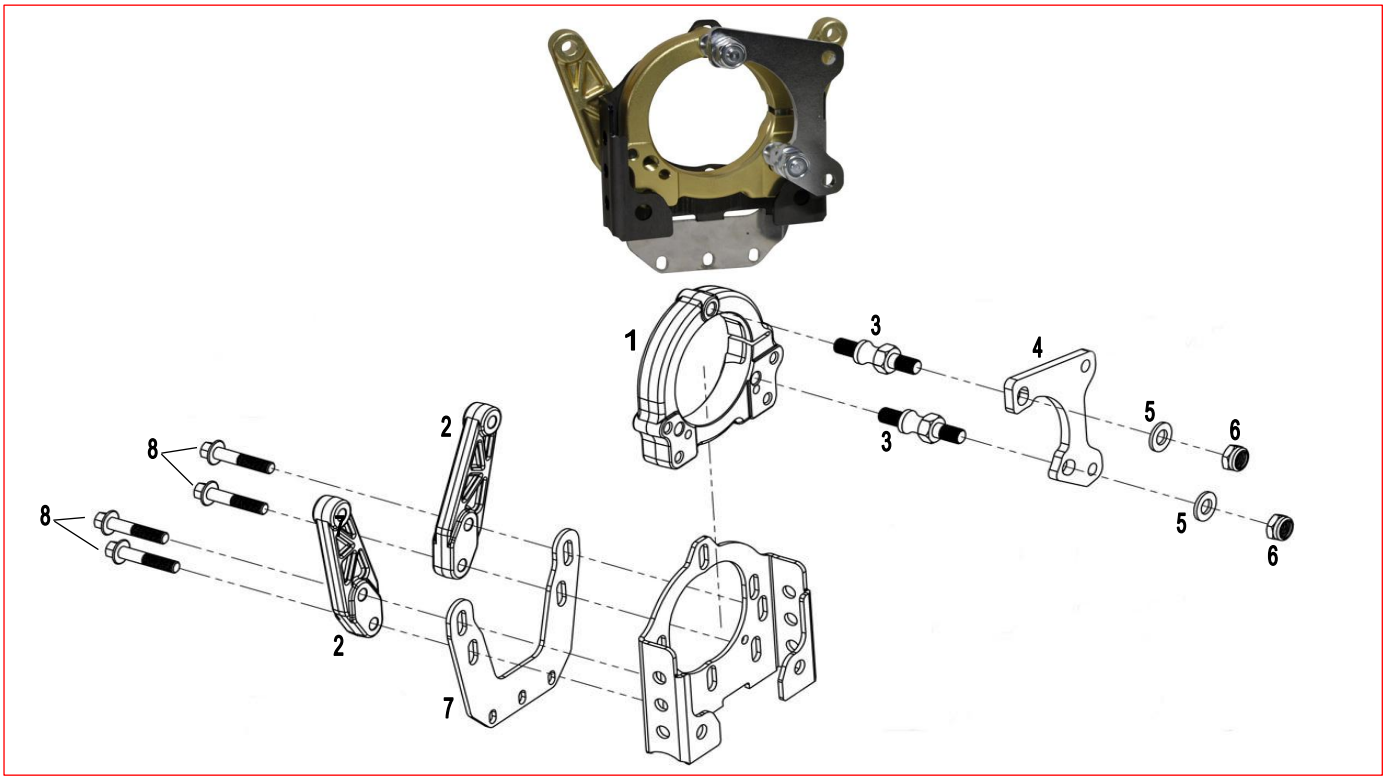

ES	COD	DESCRIZIONE	ITEMS
A	FK0.02951	Kit Flange Mod.Passo 2	Axle Flange Adjuster System 2
	FK0.02940	Kit Flange Mod.Passo 4	Axle Flange Adjuster System 4
	FK0.02939	Kit Flange Mod.Passo 6	Axle Flange Adjuster System 6
	FK0.02869	Kit Flange Mod.Passo 8	Axle Flange Adjuster System 8
1	FMG.02951	Flangia Ass. 50 Oro Rid.Pas.2	Axle Flange 50 Adjust System 2
	FMG.02940	Flangia Ass. 50 Oro Rid.Pas.4	Axle Flange 50 Adjust System 4
	FMG.02939	Flangia Ass. 50 Oro Rid.Pas.6	Axle Flange 50 Adjust System 6
	FMG.02886	Flangia Ass. 50 Oro Rid.Pas.8	Axle Flange 50 Adjust System 8
2	FAG.00983	Piastra Sup. Rinforzo Sedile	Plate For Seat Support Rinfor.
3	SZ0.00609	Prig. M10x23 Piastra Pinza	Pivot 10X23 for Support
4	FC0.02869	Piastra Sup.Pinza CRG V05	Rear Brake Caliper Plate V05
5	AFN.01637	Rondella 10,5-20x2	Washer 10,5-20x2
6	AFN.00657	Dado M10 Autoblock Basso	Nut M10 Low Self-Locking
7	AML.02872	Supporto Salvadisco CRG 2012	Support Salve Disc 2012
8	AFN.00284	Vite Flangiata M8x40	M 8x 40 Flanged Head Screw
B	FK0.02951KZ	Kit Flange Mod.Passo 2 KZ	Axle Flange Adjuster System 2 KZ
	FK0.02940KZ	Kit Flange Mod.Passo 4 KZ	Axle Flange Adjuster System 4 KZ
	FK0.02939KZ	Kit Flange Mod.Passo 6 KZ	Axle Flange Adjuster System 6 KZ
	FK0.02869KZ	Kit Flange Mod.Passo 8 KZ	Axle Flange Adjuster System 8 KZ
1	FMG.02951	Flangia Ass. 50 Oro Rid.Pas.2	Axle Flange 50 Adjust System 2
	FMG.02940	Flangia Ass. 50 Oro Rid.Pas.4	Axle Flange 50 Adjust System 4
	FMG.02939	Flangia Ass. 50 Oro Rid.Pas.6	Axle Flange 50 Adjust System 6
	FMG.02886	Flangia Ass. 50 Oro Rid.Pas.8	Axle Flange 50 Adjust System 8
2	FAG.00983	Piastra Sup. Rinforzo Sedile	Plate For Seat Support Rinfor.
3	SZ0.00609	Prig. M10x23 Piastra Pinza	Pivot 10X23 for Support
4	FC0.02869	Piastra Sup.Pinza CRG V05	Rear Brake Caliper Plate V05
5	AFN.01637	Rondella 10,5-20x2	Washer 10,5-20x2
6	AFN.00657	Dado M10 Autoblock Basso	Nut M10 Low Self-Locking
7	AML.02872	Supporto Salvadisco CRG 2012	Support Salve Disc 2012
8	FZ0.02566	Supporto Paracatena 125 Flange 201	Chain Guard Support 125 2012
9	AFN.00968	Vite M 8x 25 Flangiata	M 8x 25 Flanged Head Screw
10	AFN.00284	Vite Flangiata M8x40	M 8x 40 Flanged Head Screw
C	FK0.02886	Kit Flange DD2 Mod.Passo 8	Axle Flange DD2 Adjuster System 8
1	FMG.02886	Flangia Ass. 50 Oro Rid.Pas.8	Axle Flange 50 Adjust System 8
2	FAG.00983	Piastra Sup. Rinforzo Sedile	Plate For Seat Support Rinfor.
3	SZ0.00609	Prig. M10x23 Piastra Pinza	Pivot 10X23 for Support
4	FZ0.00942	Piastra Sup.Pinza DD2 V05	Rear Brake Caliper Plate V05 DD2
5	AFN.01637	Rondella 10,5-20x2	Washer 10,5-20x2
6	AFN.00657	Dado M10 Autoblock Basso	Nut M10 Low Self-Locking
7	AML.02872	Supporto Salvadisco CRG 2012	Support Salve Disc 2012
8	AFN.00284	Vite Flangiata M8x40	M 8x 40 Flanged Head Screw

ES	COD	DESCRIZIONE	ITEMS
1	AFS.00246	Chiavetta Assale 2 pioli NR	Rear Axle Key Black 2 pivot
2	AFS.00247	Chiavetta Assale 3 pioli NR	Rear Axle Key Black 3 pivot
3	FL1.01022	Rinforzo Assale Sp20 Nylon	Nylon Internal Spacer SP.20
	FL1.01024	Rinforzo Assale Sp25 Nylon	Nylon Internal Spacer SP.25
4	AFS.01019	Chiavetta 8x5x50mm	Key 8x5x50mm
5	AFS.00664	Chiavetta 8x7x60mm	Key 8x7x60mm
6	AFS.00665	Chiavetta 8x7x80mm	Key 8x7x80mm
7	FMN.01531	Flangia Assale 30 4F CRG Mini	Axle Flange 30 4H CRG Mini
8	FMN.01683	Flangia Assale 25 4F CRG Mini	Axle Flange 25 4H CRG Mini
9	FMN.02413	Flangia Assale 30 4F NA3 Co	Axle Flange 30 4H CRG NA3
10	FMN.00449	Flangia Assale 40 3F Nera Co	Axle BearingFlange40 3H BL.Co.
11	FMN.00027	Flangia Assale 40 4F Nera Co	Axle BearingFlange40 4H BL.Co.
12	FMN.00158	Flangia Assale 50 3F Nera Co	Axle BearingFlange50 3H BL.Co.
13	FMN.01426	Flangia Assale 50 4F Ibr.Co	Axle BearingFlange50 4H Hyb.Co.
14	AFN.00396	Cuscinetto Assale 25 con grani	Axle 25 Bearing with grains
15	AFN.00655	Cuscinetto Assale 30 con grani	Axle 30 Bearing with grains
16	AFN.00448	Cuscinetto Assale 40 con grani	Axle 40 Bearing with grains
17	AFN.01356	Cuscinetto Ass. 50-80 con grani	Axle Bearing 50-80 with grains
18	AFN.00157	Cuscinetto Ass. 50-90 con grani	Axle Bearing 50-90 with grains
19	AFS.02449	Cuscinetto Ass.50-80 SKFCeramic	Axle Bearing 50-80 SKF Ceramic
19	AFS.02451	Cuscinetto Ass.40-80 SKFCeramic	Axle Bearing 40-80 SKF Ceramic
20	AFN.00289	Grano M6x 6 STD	Grub Screw M6x 6 STD
20	AFN.01373	Grano M6x 6 Passo Fine	Grub Screw M6x 6
21	AFN.01372	Grano M8x 8 AX 40/50	Grub Screw M8x 8 AX 40/50

1

2

3 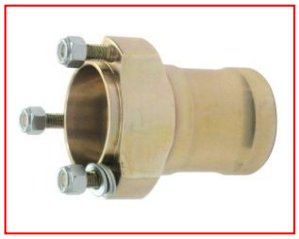

4 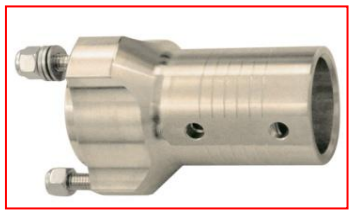

5 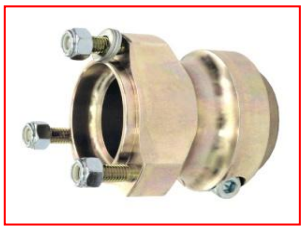

6

7

8 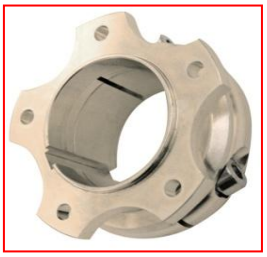

9

10 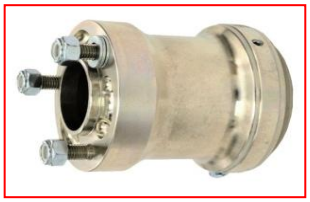

11 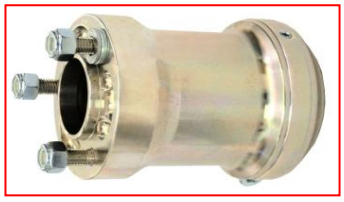

12

13

14

15

16

ES	COD	DESCRIZIONE	ITEMS
1	AFS.01494	Flangia Assale 50-80 Ibrido MG	Magn.Axle Flange 50-80 Hyb.
2	AFS.01498	Mozzo Ant.D25x68mm MG Co	Magn. Front Hub 25x 68 Co
3	AFS.01490	Mozzo Ant.D25x83mm MG Co	Magn. Front Hub 25x 83 Co
4	AFS.01491	Mozzo Ant.D25x99mm MG Co	Magn. Front Hub 25x 99 Co
5	AFS.01521	Mozzo Ant.D40x76mm MG Co	Magn. Front Hub 40x 76 Co
6	AFS.01492	Mozzo Corona 50 100 MG	Magn. Sprocket Carrier 50 100
7	AFS.01493	Mozzo Disco Ant.V06 MG Co.	Magn. Front Disc Hub V06 Co.
8	AFS.01007	Mozzo Disco Post. 50 MG	Magn. Rear Brake Disc Hub 50
9	AFS.01543	Mozzo Post.50x 78 MG Co	Magn. Rear Hub 50x 78 Co
10	AFS.01344	Mozzo Post.50x 98 MG Co	Magn. Rear Hub 50x 98 Co
11	AFS.01540	Mozzo Post.50x108 MG Co	Magn. Rear Hub 50x108 Co
12	AFN.00129	Rondella 8,5-17x1,5	Washer 8,5-17x1,5
13	AFN.00128	Dado M 8 Autobloccante Alto	Nut M 8 High Self-Locking
14	AFS.02657	Mozzo Post.50x100 All. 1 Vite	All. Rear Hub 50X100 1 Screw
15	AFS.02658	Mozzo Post.50x100 All. 2 Vite	All. Rear Hub 50X100 2 Screw
16	AFS.02659	Mozzo Post.50x116 All. 3 Vite	All. Rear Hub 50X116 3 Screw

A

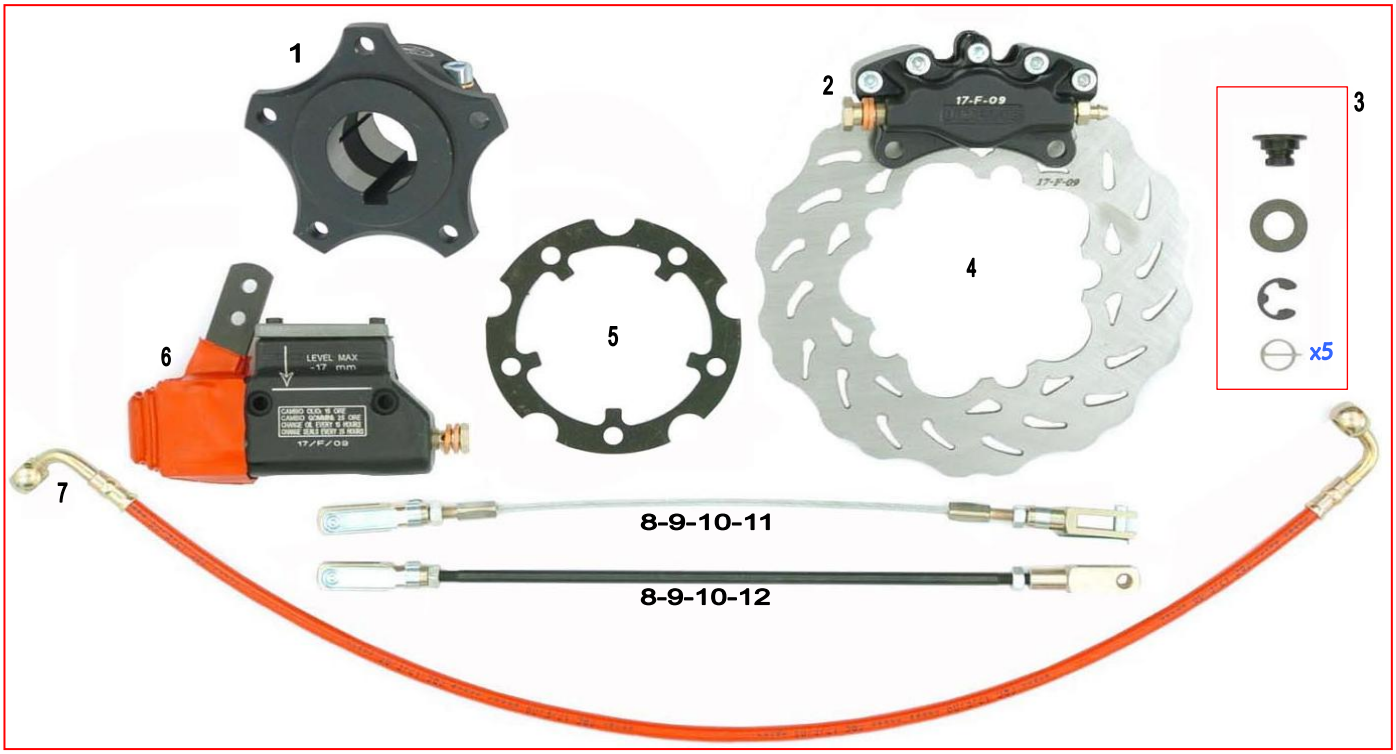

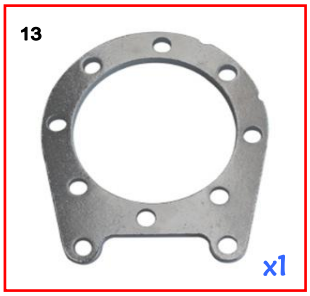

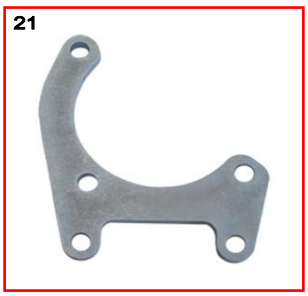

ES	COD	DESCRIZIONE	ITEMS
A	CRG.02918	Impianto New Age Mini Comp.	Mini NewAge Brake System Comp.
1	CRG.00743	Pinza Freno Marcata CRG Mini NA	Mini New Age Brake Caliper CRG
1	FMN.00748	Mozzo Disco Post.All30 NA/V04	Rear Brake Disc Hub NA/V04 30 Al.
2	FM0.00743	Pinza New Age Completa	NewAge BrakeCaliper Comp.
3	FK0.00314	Bussola Disco V04ant/NewAge Co	Front B.DiscV04/NewAge Bush.Co
4	SL1.02243	Disco Freno NA Mini 2010	NA Mini2010 Brake Disc
5	SBN.01524	Flangia Disco New Age NERA	Brake DiscFlangeNewAge Bl.
6	FM0.00192	Pompa Freni UP/V04/V05 CRG	Rear Master Cylinder V05 CRG Co
7	AFS.01533	Tubo Freno New Age Occ.mm 615	Brake Tube New Age Eye.mm 615
8	AFS.00216	Forchetta Semplice STD	Simple Fork Standard
9	AFS.00224	Clift STD	Clift STD
10	AFN.00093	Dado M 6	Nut M 6
11	AFS.00808	Cavo Sicurezza cm.33	Safety Cable Cm.33
12	SBN.00704	Asta Freno cm.33 NERA	Draw Pin cm.33 Black
13	FC0.01482	Piastra Supp.Pinza NA 4F	NA 4H Mini Brake Caliper Supp
14	AFN.00047	Rondella Ondulata 8	Undulated Washer 8
15	AFN.00286	Dado M 8 Metalblock	Nut M 8 Metalblock
16	AFN.00307	Vite M 8x 30 Esagonale	M 8x 30 Hexagonal Head Screw
17	AFN.00136	Rondella Ottone 6,5-10x1	Brass Washer 6,5-10x1
18	AFN.00234	Dado M 6 Metalblock	Nut M 6 Metalblock
19	AFN.00233	Vite M 6x 20 Esagonale	M 6x 20 Hexagonal Head Screw
20	FBN.00252	Spessore 8,5-14x 5 Barretta	Spacer 8,5-14x 5 Track Rod
21	FC0.02411	Piastra Supp.Pinza Mini NA3	NA3 Mini Brake Caliper Supp

A

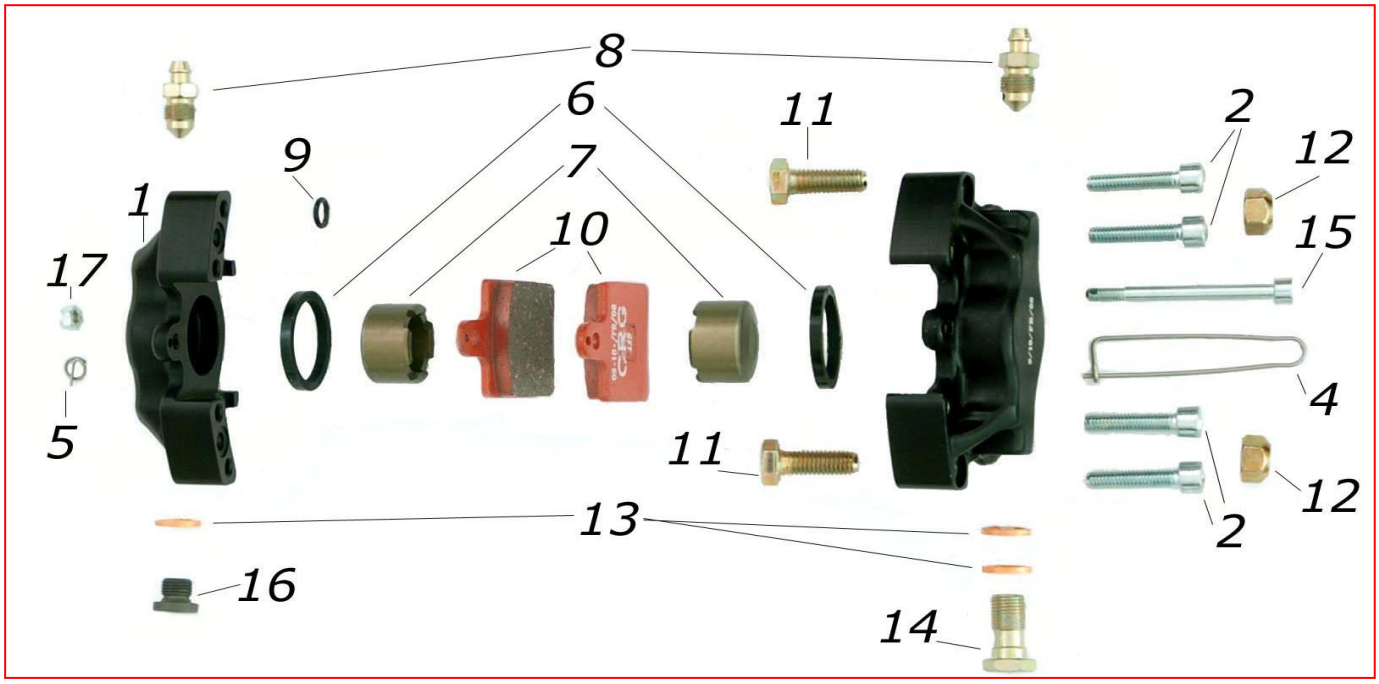

18

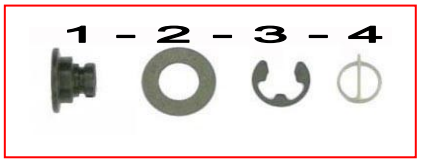

ES	COD	DESCRIZIONE	ITEMS
A	FM0.00743	Pinza New Age Completa	NewAge BrakeCaliper Comp.
1	SDN.0743D	Semi Pinza NEW AGE Dx Nera	Hakf NEW AGE Caliper Rh Bl
2	AFN.00281	Vite M 6x 30 Cilindrica	M 6 x 30 Socket Head Screw
3	SDN.0743S	Semi Pinza NEW AGE Sx Nera	Half NEW AGE Caliper Lf Bl
4	AFS.00187	Spina Sicurezza UP/V04	UP/V04>Safety Pin
5	AFS.00203	Spina Elastica D 6	Elastic Pin D 6
6	AFS.00179	Gommino Pinza UP/V04/V05 Ant.	UP/V04/V05 Fr. Piston Seal
7	SD1.00312	Pistoncino Pinza NA	NA Front Brake Piston
8	SZ0.00184	Spurgo M10 UP/V04/V05	Bleeder M10 UP/V04/V05
9	AFN.00182	OR Pinza UP/V04/V05	OR > Caliper UP/V04/V05
10	AFS.00366	Pastiglia Fr.NA/UP/V05 Ant.Gh.	Brake Pad NA/UP/V05 Front Iron
11	AFN.00107	Vite M 8x 25 Esagonale	M 8 x 25 Socket Head Screw
12	AFN.00286	Dado M 8 Metalblock	Nut M 8 Metalblock
13	AFN.00186	Rondella Rame 10,5-14x2	Copper Washer 10,5-14x2
14	SZ0.00185	Raccordo M10 UP/V04/V05	Fitting M10 UP/V04/V05
15	SL1.00367	Vite M 5x 55 Cilindirca Forata	M 5x55 Holed Socket Screw
16	SBN.00369	Tappo M10 UP/V04/V05	Caliper Cap M10 UP/V04/V05
17	AFN.00360	Dado M 5 Autobloccante Basso	Nut M 5 Low Self-Locking
18	CRG.00364	Kit Revisione Pinza UP/V05 Ant	Brake Caliper OverhaulUP/V05 F
B	FK0.00314	Bussola Disco V04ant/NewAge Co	Front B.DiscV04/NewAge Bush.Co
1	SBN.00314	Bussola Disco V04ant/NewAge Nr	Front B.DiscV04/NewAge Bushing
2	AFN.00230	Rondella Elastica Disco Freno	Elastic Washer > Brake Disc
3	AFN.00231	Seeger D8 Disco Freno	Seeger D8 Brake Disc
4	AFS.00232	Spina Elastica D10 Disco Freno	Elastic Pin D10 Brake Disc

A

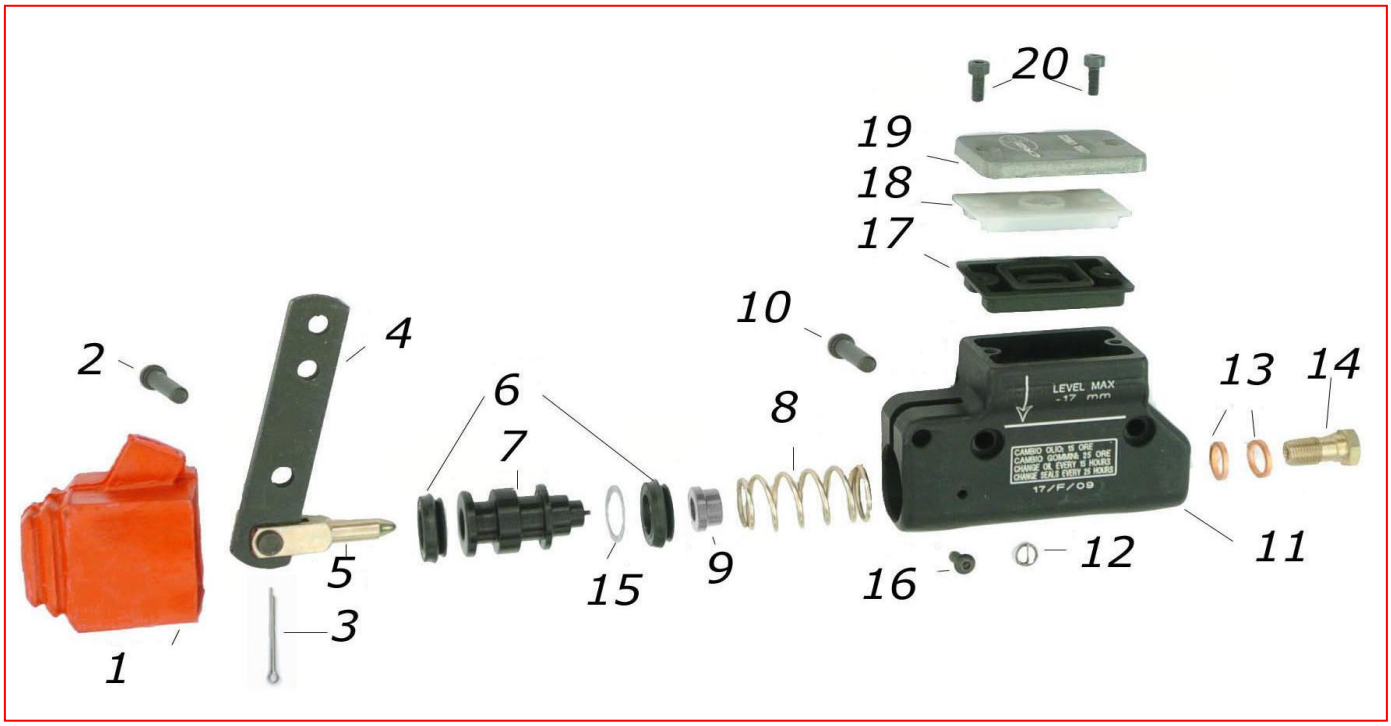

B

ES	COD	DESCRIZIONE	ITEMS
1	AFS.00199	Copripolevere Pompa Freni	Master Cylinder>Dust Cover
2	SBN.00200	Spina Pompa Freni 16mm Nera	Master Cylinder Pin 16mm Black
3	AFN.00201	Copiglia	Master Cylinder Split Pin
4	SBN.00197	Leva Pompa Freni Nera	Master Cylinder LEVER Black
5	AFS.00196	Puntale Pompa Freni	Fork with Point
6	AFS.00194	Gommino Pompa UP/V04/V05	Master Cyl.Rubber UP/V04/V05
7	SAN.00210	Pistoncino Pompa UP/V04/V05	Master Cyl.Piston UP/V04/V05
8	SZ0.00193	Molla Pompa Freni UP/V04/V05	Master Cyl.Spring UP/V04/V05
9	SL1.00208	Tap. Molla Pompa UP/V04/V05	Master CYL.Spring Cap UP/V04/V05
10	SBN.00202	Spina Pompa Freni 35,5mm Nera	Master Cylinder Pin 35,5mm Bl.
11	SAN.00192	Corpa Pompa Freno UP/V04 Nero	Master Cylinder UP/V04 Body
12	AFS.00981	Spina Elastica D8	Elastic Pin D8
13	AFN.00186	Rondella Rame 10,5-14x2	Copper Washer 10,5-14x2
14	SZ0.00185	Raccordo M10 UP/V04/V05	Fitting M10 UP/V04/V05
15	AFN.00195	Distanziale 14-20x0,5 Pompa F.	Spacer 14-20x0,5 Master Cylin.
16	AFN.02262	Vite M 4x 6 Bombata	M 4x 6 Convex Head Screw
17	AFS.00205	Membrana Pompa UP/V04	UP/V04>Gasket
18	AFS.00204	Tappo Membrana Pompa UP/V04	UP/V04>Tank Gasket CAP
19	CRG.00212	Cop. Pompa Freno UP CRG	CRG Master Cylinder UP Cover
20	AFN.00206	Vite M 4x 12 Cilindrica	M 4 x 12 Socket Head Screw
A	FM0.00192	Pompa Freni UP/V04/V05 CRG CO	Rear Master Cylinder V05 CRG Co
B	CRG.00192	Kit Rev. 1 Pompa UP/V04/V05	Mas.Cyl.Overhaul Kit UP/V04/V05

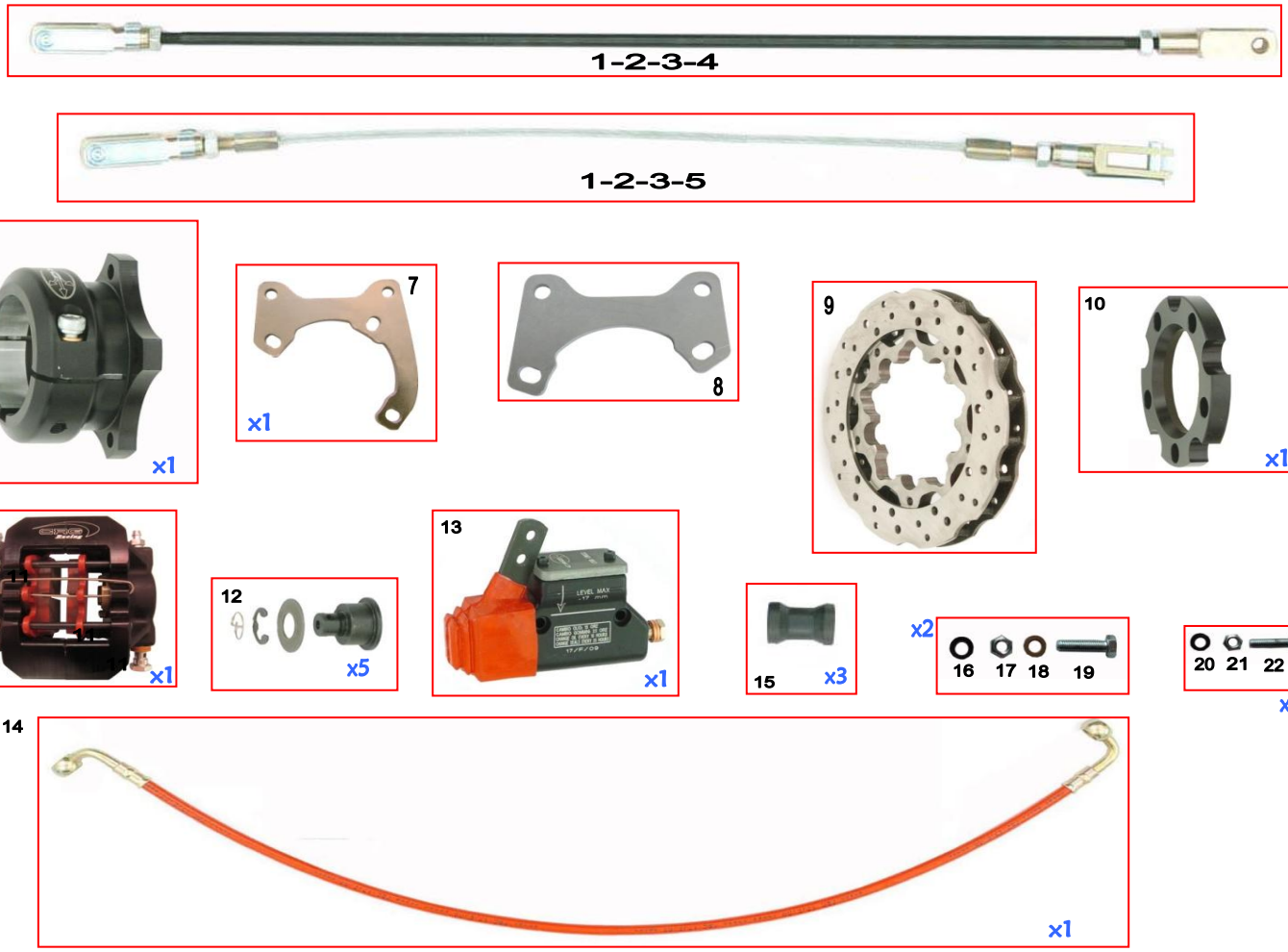

ES	COD	DESCRIZIONE	ITEMS
	CRG.01727	Impianto V05 G Post D50 Co	Brake System V05 I Rear Co
1	AFS.00216	Forchetta Semplice STD	Simple Fork Standard
2	AFS.00224	Clift STD	Clift STD
3	AFN.00093	Dado M 6	Nut M 6
4	SBN.00918	Asta Freno cm.45 Nera	Draw Pin cm.45 Black
5	AFS.00809	Cavo Sicurezza Cm.44	Safety Cable Cm.45
6	FMN.00238	Moz. Disco Post.All.50 V04/V05	Rear Brake Disc Hub V04/V05 50 Al
7	FC0.01641	Piastra Supp.Pinza V05 Post.	Rear Brake Caliper PlateV05
8	FC0.02869	Piastra Supp.Pinza V05 Post.2012	Rear Brake Caliper PlateV05 2012
9	AFS.01727	Disco Freno V05 Post.Ghisa	Rear Brake Disc V05 Iron
10	SAN.01592	Flangia Disco V05 Posteriore	Rear Brake Disc Flange V05
11	FM0.01727	Pinza Freno Post V05 G Co	Rear Brake Caliper V05 Iron Co
12	FK0.01660	Bussola Disco V05 Post. Comp.	Rear BrakeDiscV05 Bushing Comp
13	FM0.00192	Pompa Freni UP/V04/V05 CRG	Rear Master CYL. V05 CRG CO
14	FAN.01462	Dsitanziale Pinza xIbrido	Caliper Spacer x Hybrid
15	AFS.00240	Tubo Freno V05 Post Occ.mm 720	Brake Tube V05 Rear Eye.mm 720
16	AFN.00047	Rondella Ondulata 8	Undulated Washer 8
17	AFN.00286	Dado M 8 Metalblock	Nut M 8 Metalblock
18	AFN.00277	Rondella 8,5-14x2	Washer 8,5-14x2
19	AFN.00307	Vite M 8x 30 Esagonale	M 8x 30 Hexagonal Head Screw
20	AFN.00105	Rondella 6,5-12x1,5	Washer 6,5-12x1,5
21	AFN.00234	Dado M 6 Metalblock	Nut M 6 Metalblock
22	AFN.00183	Vite M 6x 20 Cilindrica	M 6x 20 Socket Head Screw

A

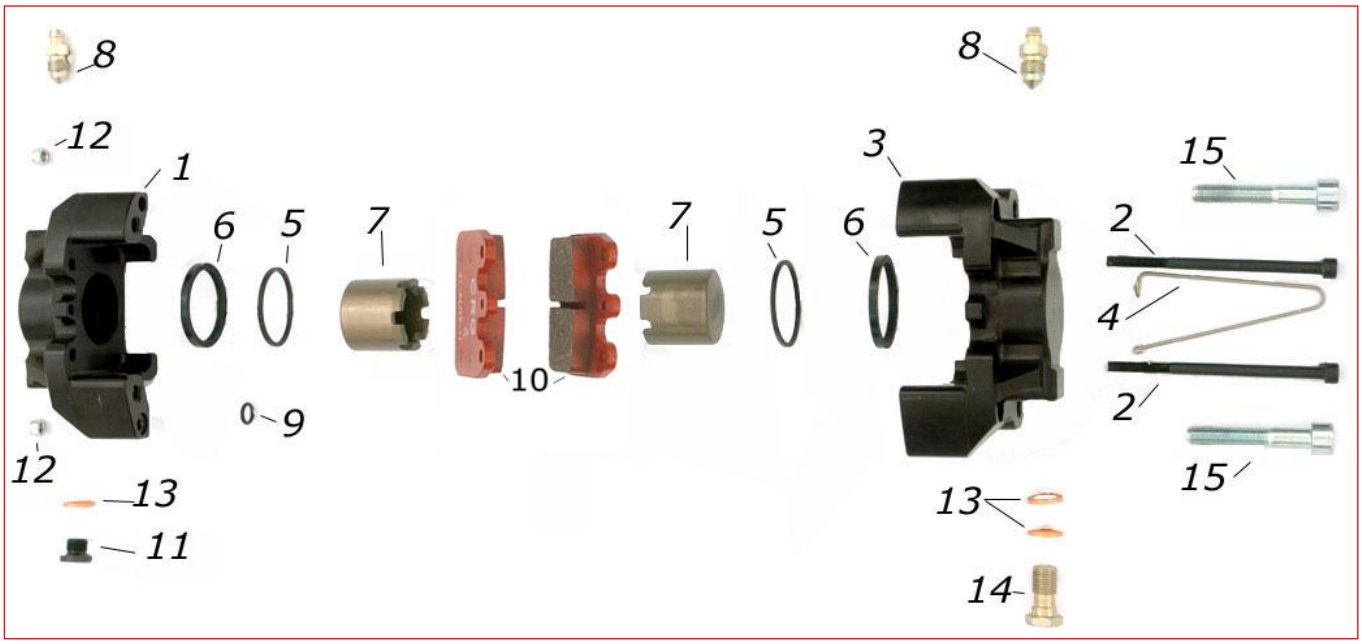

B

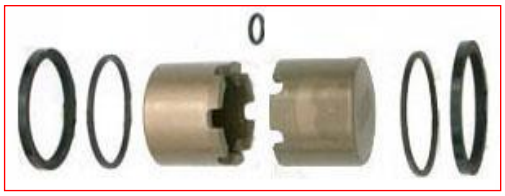

C

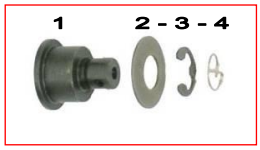

ES	COD	DESCRIZIONE	ITEMS
A	FM0.01727	Pinza Freno Post V05 G Co	Rear Brake Caliper V05 IRON Co
1	SDN.1678D	Semi Pinza V05 Post. Dx Nera	Half R.CaliperV05 Right Black
2	AFN.01679	Vite M 5x 80 Cilindrica	M 5 x 80 Socket Head Screw
3	SDN.1678S	Semi Pinza V05 Post. SX Nera	Half R.CaliperV05 Left Black
4	AFS.01682	Spina Sicurezza V05/V08 Post.	V05/V08 Rear Safety Pin
5	AFS.01681	Gommino V05/V08 Parapolvere	V05/V08 Dust Guard Seal
6	AFS.01051	Gommino V05/V08 Pinza Post.	V05/V08 Rear Brake Calip.Seal
7	SD1.01680	Pistoncino Pinza V05 Post.	V05 Rear Caliper Piston
8	SZ0.00184	Spurgo M10 UP/V04/V05	Bleeder M10 UP/V04/V05
9	AFN.00182	OR Pinza UP/V04/V05	OR > Caliper UP/V04/V05
10	AFS.01745	Pastiglia V05 Rossa Post	Rear Pad V05 C-Iiron Red
11	SBN.00369	Tappo M10 UP/V04/V05	Caliper Cap M10 UP/V04/V05
12	AFN.00360	Dado M 5 Autobloccante Basso	Nut M 5 Low Self-Locking
13	AFN.00186	Rondella Rame 10,5-14x2	Copper Washer 10,5-14x2
14	SZ0.00185	Raccordo M10 UP/V04/V05	Fitting M10 UP/V04/V05
15	AFN.00159	Vite M 8x 45 Cilindrica	M 8 x 45 Socket Head Screw
B	CRG.01681	Kit Revisione Pinza Post.V05	Kit V05 Brake Caliper Overhaul
C	FK0.01660	Bussola Disco V05 Post. Comp.	Rear BrakeDiscV05 Bushing Comp
1	SBN.01660	Bussola Disco V05 Post.Nera	Rear Brake DiscV05 Bushing Bl.
2	AFN.01677	Rondella Elastica Disco Fr.V05	Elastic Washer V05 Brake Disc
3	AFN.00231	Seeger D 8 Disco Freno	Seeger D 8 Brake Disc
4	AFS.00232	Spina Elastica D10 Disco Freno	Elastic Pin D10 Brake Disc

A

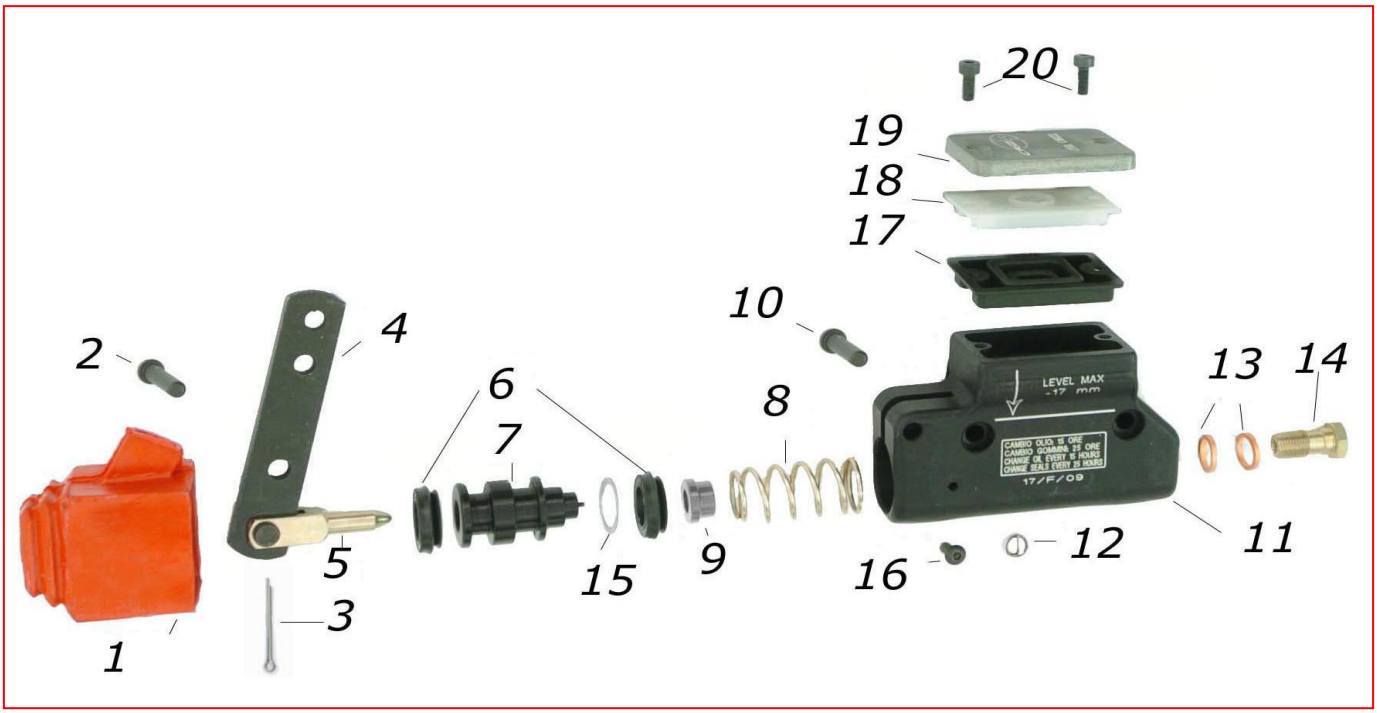

B

ES	COD	DESCRIZIONE	ITEMS
1	AFS.00199	Copripolvere Pompa Freni	Master Cylinder>Dust Cover
2	SBN.00200	Spina Pompa Freni 16 mm	Master Cylinder Pin 16mm
3	AFN.00201	Copiglia	Master Cylinder Split Pin
4	SBN.00197	Leva Pompa Freni Nera	Master Cylinder Leber Black
5	AFS.00196	Puntale Pompa Freni	Fork with Point
6	AFS.00194	Gommino Pompa UP/V04/V05	Master Cyl.Rubber UP/V04/V05
7	SAN.00210	Pistoncino Pompa UP/V04/V05	Master Cyl.Piston UP/V04/V05
8	SZ0.00193	Molla Pompa Freni UP/V04/V05	Master Cyl.Spring UP/V04/V05
9	SL1.00208	Tappo Mol. POMPA UP/V04/V05	Master CYL.SPRING CAP UP/V04/V05
10	SBN.00202	Spina Pompa Freni 35,5mm	Master Cylinder Pin 35,5mm
11	SAN.00192	Corpo Pompa Freno UP/V04/V05	Master Cylinder UP/V04/V05 Body
12	AFS.00981	Spina Elastica D8	Elastic Pin D8
13	AFN.00186	Rondella Rame 10,5-14x2	Copper Washer 10,5-14x2
14	SZ0.00185	Raccordo M10 UP/V04/V05	Fitting M10 UP/V04/V05
15	AFN.00195	Distanziale 14-20x0,5 Pompa F.	Spacer 14-20x0,5 Master Cylin.
16	AFN.02262	Vite M 4x 6 Bombata	M 4x 6 Convex Head Screw
17	AFS.00205	Membrana Pompa UP/V04/V05	UP/V04/V05>Gasket
18	AFS.00204	Tappo Membrana Pompa UP/V04	UP/V04>Tank Gasket CAP
19	CRG.00212	Coperchio Pom. Freno Up CRG	CRG Master Cylinder Up Cover
20	AFN.00206	Vite M 4x 12 Cilindrica	M 4 x 12 Socket Head Screw
A	FM0.00192	Pompa Freni UP/V04/V05 CRG	Rear Master Cyl. V05 CRG
B	CRG.00192	Kit Rev. 1 Pompa UP/V04/V05	Mast.Cyl.Overhaul Kit UP/V04/V05

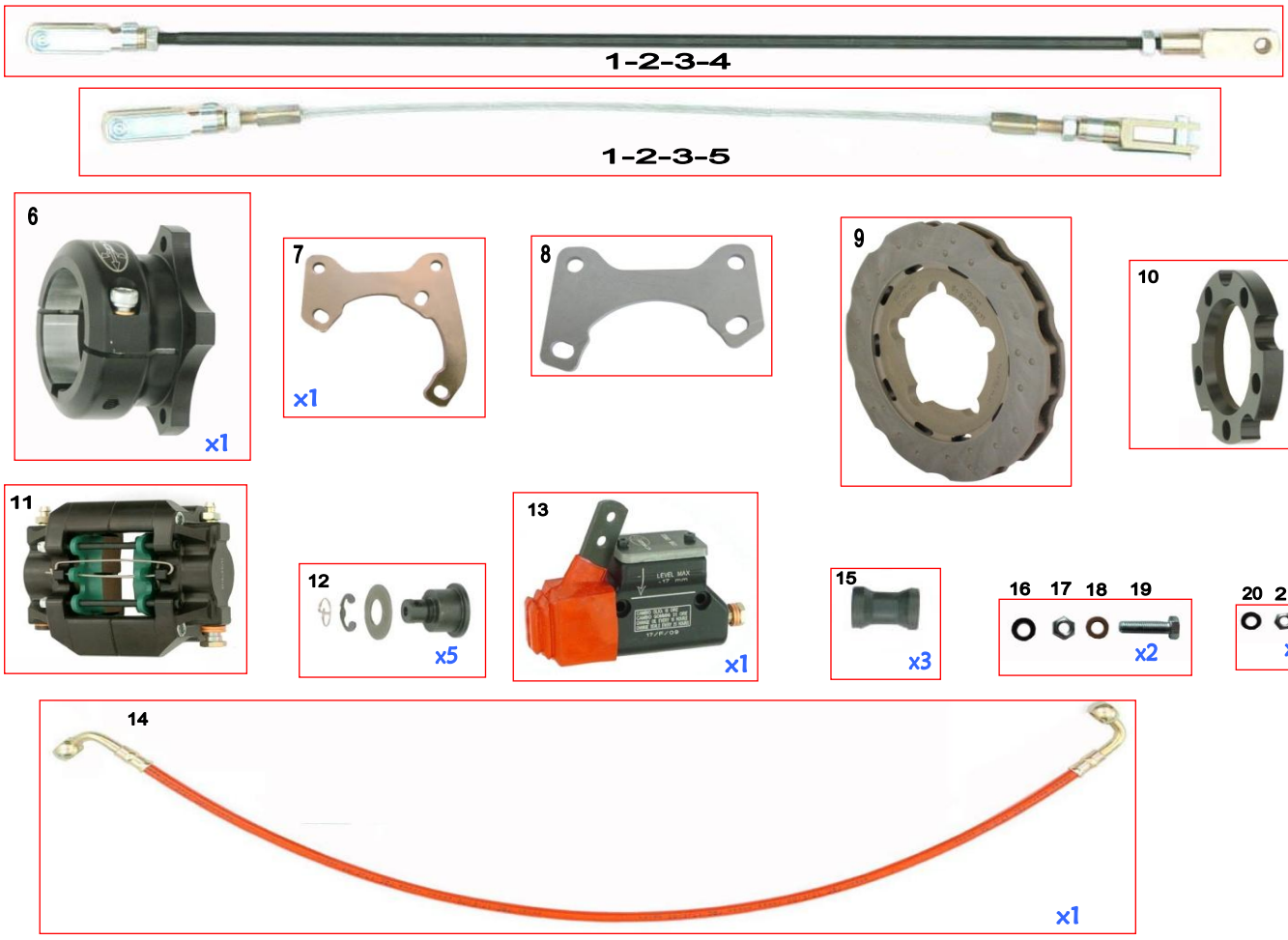

ES	COD	DESCRIZIONE	ITEMS
	CRG.01678	Impianto V05 D Post D50 Co	Brake System V05 D Rear Co
1	AFS.00216	Forchetta Semplice STD	Simple Fork Standard
2	AFS.00224	Clift STD	Clift STD
3	AFN.00093	Dado M 6	Nut M 6
4	SBN.00918	Asta Freno cm.45 Nera 100cc	Draw Pin cm.45 Black 100cc
5	AFS.00809	Cavo Sicurezza Cm.44 100cc	Safety Cable Cm.45 100cc
6	FMN.00238	Mozzo Dis. Post.All.50 V04/V05	Rear Brake Disc Hub V04/V05 50 Al.
7	FC0.01641	Piastra Supp.Pinza V05 Post.	Rear Brake Caliper PlateV05
8	FC0.02869	Piastra Supp.Pinza V05 Post.2012	Rear Brake Caliper PlateV05 2012
9	AFS.01591	Disco Freno V05 Post.Duralcan	Rear Brake Disc V05 Duralcan
10	SAN.01592	Flangia Disco V05 Posteriore	Rear Brake Disc Flange V05
11	FM0.01678	Pinza Posteriore V05 Co.Dural.	Rear Brake Caliper V05 Co.Dur.
12	FK0.01660	Bussola Disco V05 Post. Comp.	Rear BrakeDiscV05 Bushing Comp
13	FM0.00192	Pompa Freni UP/V04/V05 CRG	Rear Master Cylinder V05 CRG
14	FAN.01462	Distanziale Pinza xIbrido	Caliper Spacer x Hybrid
15	AFS.00240	Tubo Freno V05 Post Occ.mm 720	Brake Tube V05 Rear Eye.mm 720
16	AFN.00047	Rondella Ondulata 8	Undulated Washer 8
17	AFN.00286	Dado M 8 Metalblock	Nut M 8 Metalblock
18	AFN.00277	Rondella 8,5-14x2	Washer 8,5-14x2
19	AFN.00307	Vite M 8x 30 Esagonale	M 8x 30 Hexagonal Head Screw
20	AFN.00105	Rondella 6,5-12x1,5	Washer 6,5-12x1,5
21	AFN.00234	Dado M 6 Metalblock	Nut M 6 Metalblock
22	AFN.00183	Vite M 6x 20 Cilindrica	M 6x 20 Socket Head Screw

A

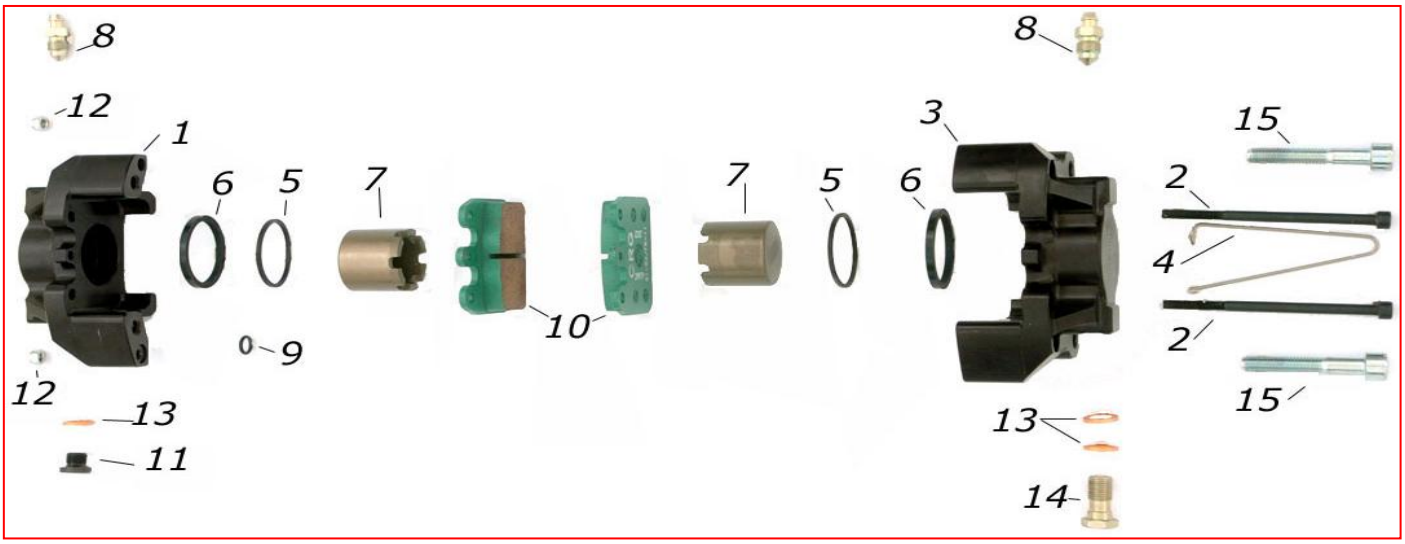

B

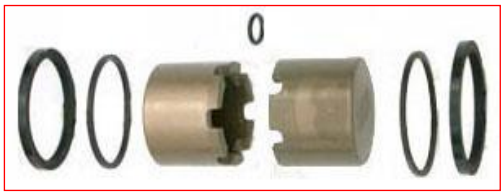

C

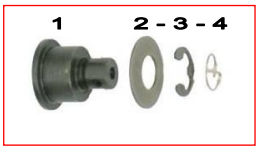

ES	COD	DESCRIZIONE	ITEMS
A	FM0.01678	Pinza Posteriore V05 Co.Dural.	Rear Brake Caliper V05 Co.Dur.
1	SDN.1678D	Semi Pinza V05 Post. DX Nera	Half R.CaliperV05 Right Black
2	AFN.01679	Vite M 5x 80 Cilindrica	M 5 x 80 Socket Head Screw
3	SDN.1678S	Semi Pinza V05 Post. SX Nera	HALF R.CaliperV05 Left Black
4	AFS.01682	Spina Sicurezza V05/V08 Post.	V05/V08 Rear Safety Pin
5	AFS.01681	Gommino V05/V08 Parapolvere	V05/V08 Dust Guard Seal
6	AFS.01051	Gommino V05/V08 Pinza Post.	V05/V08 REAR Brake Calip.Seal
7	SD1.01680	Pistoncino Pinza V05 Post.	V05 Rear Caliper Piston
8	SZ0.00184	Spurgo M10 UP/V04/V05	Bleeder M10 UP/V04/V05
9	AFN.00182	OR Pinza UP/V04/V05	OR > Caliper UP/V04/V05
10	AFS.01624	Pastiglia V05 Verde Post	Rear Pad V05 Green-Dural
11	SBN.00369	Tappo M10 UP/V04/V05	Caliper Cap M10 UP/V04/V05
12	AFN.00360	Dado M 5 Autobloccante Basso	Nut M 5 Low Self-Locking
13	AFN.00186	Rondella Rame 10,5-14x2	Copper Washer 10,5-14x2
14	SZ0.00185	Raccordo M10 UP/V04/V05	Fitting M10 UP/V04/V05
15	AFN.00159	Vite M 8x 45 Cilindrica	M 8 x 45 Socket Head Screw
16	CRG.01681	Kit Revisione Pinza Post.V05	KIT V05 Brake Caliper Overhaul
B	FK0.01660	Bussola Disco V05 Post. Comp.	Rear BrakeDiscV05 Bushing Comp
1	SBN.01660	Bussola Disco V05 Post.Nera	Rear Brake DiscV05 Bushing Bl.
2	AFN.01677	Rondella Elastica Disco Fr.V05	Elastic Washer V05 Brake Disc
3	AFN.00231	Seeger D 8 Disco Freno	Seeger D 8 Brake Disc
4	AFS.00232	Spina Elastica D10 Disco Freno	Elastic Pin D10 Brake Disc

A

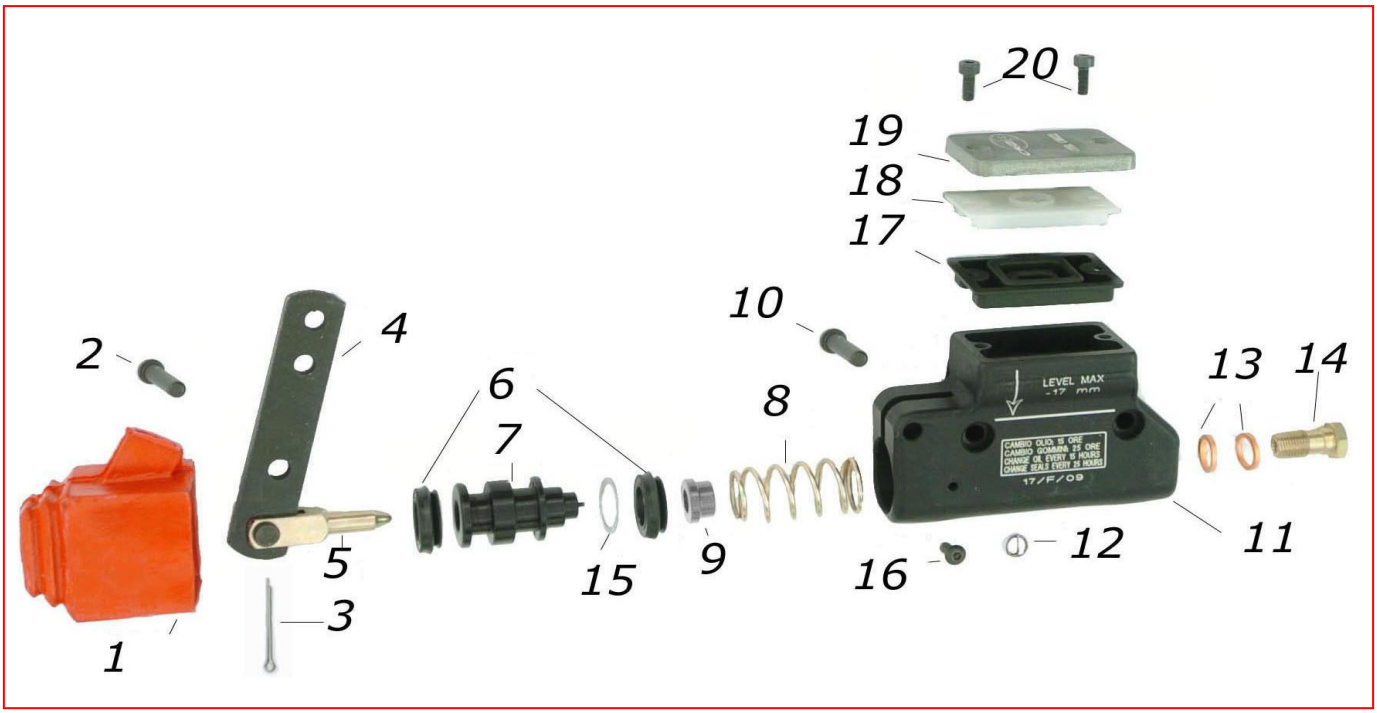

B

ES	COD	DESCRIZIONE	ITEMS
1	AFS.00199	Copripolvere Pompa Freni	Master Cylinder>Dust Cover
2	SBN.00200	Spina Pompa Freni 16 mm	Master Cylinder Pin 16mm
3	AFN.00201	Copiglia	Master Cylinder Split Pin
4	SBN.00197	Leva Pompa Freni Nera	Master Cylinder Leber Black
5	AFS.00196	Puntale Pompa Freni	Fork with Point
6	AFS.00194	Gommino Pompa UP/V04/V05	Master Cyl.Rubber UP/V04/V05
7	SAN.00210	Pistoncino Pompa UP/V04/V05	Master Cyl.Piston UP/V04/V05
8	SZ0.00193	Molla Pompa Freni UP/V04/V05	Master Cyl.Spring UP/V04/V05
9	SL1.00208	Tappo Mol. POMPA UP/V04/V05	Master CYL.SPRING CAP UP/V04/V05
10	SBN.00202	Spina Pompa Freni 35,5mm	Master Cylinder Pin 35,5mm
11	SAN.00192	Corpo Pompa Freno UP/V04/V05	Master Cylinder UP/V04/V05 Body
12	AFS.00981	Spina Elastica D8	Elastic Pin D8
13	AFN.00186	Rondella Rame 10,5-14x2	Copper Washer 10,5-14x2
14	SZ0.00185	Raccordo M10 UP/V04/V05	Fitting M10 UP/V04/V05
15	AFN.00195	Distanziale 14-20x0,5 Pompa F.	Spacer 14-20x0,5 Master Cylin.
16	AFN.02262	Vite M 4x 6 Bombata	M 4x 6 Convex Head Screw
17	AFS.00205	Membrana Pompa UP/V04/V05	UP/V04/V05>Gasket
18	AFS.00204	Tappo Membrana Pompa UP/V04	UP/V04>Tank Gasket CAP
19	CRG.00212	Coperchio Pom. Freno Up CRG	CRG Master Cylinder Up Cover
20	AFN.00206	Vite M 4x 12 Cilindrica	M 4 x 12 Socket Head Screw
A	FM0.00192	Pompa Freni UP/V04/V05 CRG	Rear Master Cyl. V05 CRG
B	CRG.00192	Kit Rev. 1 Pompa UP/V04/V05	Mast.Cyl.Overhaul Kit UP/V04/V05

1-2-3-4

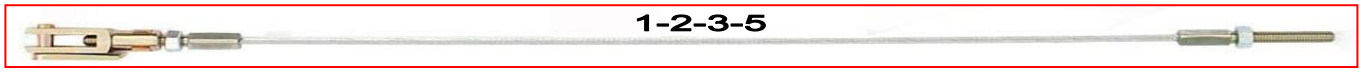
1-2-3-5

6

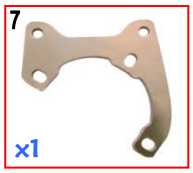
7
x1

8

9

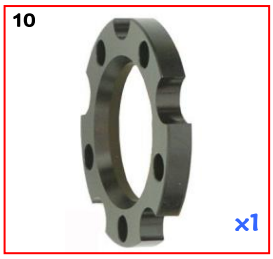
10
x1

12
x5

11
x1

13

15

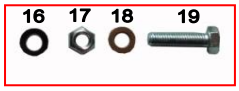
16 17 18 19

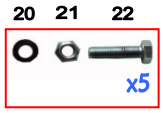
20 21 22
x5

24

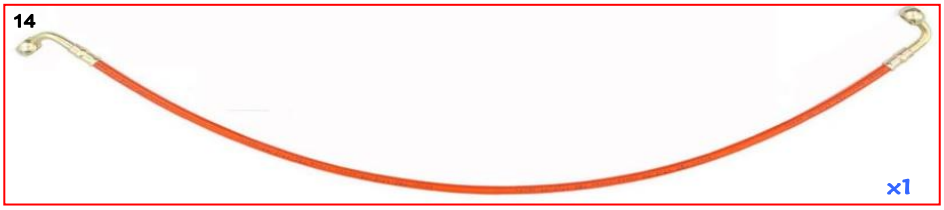
14
x1

23

25
26
27

28
29
30
31
33
32
17
16
34
37
35
36

ES	COD	D E S C R I Z I O N E	I T E M S
	CRG.01763	Impianto V05 Ghisa 125/D50 Co	Brake System125-V05 IronD50 Co
1	AFS.00216	Forchetta Semplice STD	Simple Fork Standard
2	AFS.00224	Clift STD	Clift STD
3	AFN.00093	Dado M 6	Nut M 6
4	SBN.00223	Asta Freno cm.42 NERA	DRAW Pin cm.42 BLACK
5	AFS.00227	Cavo Sicurezza Cm.41,5	Safety Cable Cm.41,5
6	FMN.00238	Mozzo Dis. Post.All.50 V04/V05	Rear Brake Disc Hub V04/V05 50 Al.
7	FC0.01641	Piastra Supp.Pinza V05 Post.	Rear Brake Caliper PlateV05
8	FC0.02869	Piastra Supp.Pinza V05 Post.2012	Rear Brake Caliper PlateV05 2012
9	AFS.01727	Disco Freno V05 Post.GHISA	Rear Brake Disc V05 IRON
10	SAN.01592	Flangia Disco V05 Posteriore	Rear Brake Disc Flange V05
11	FM0.01727	Pinza Freno Post V05 G Co	Rear Brake Caliepr V05 Iron Co
12	FK0.01660	Bussola Disco V05 Post. Comp.	Rear BrakeDiscV05 Bushing Comp
13	FM0.00329	Doppia PompaUP/V04+Rip.125	Doub.MasterCyl.UP/V04w/equa125
14	AFS.00240	Tubo Freno V05 Post Occ.mm 720	Brake Tube V05 Rear Eye.mm 720
15	FAN.01462	Distanziale Pinza xIbrido Nero	Caliper Spacer Black x Hybrid
16	AFN.00047	Rondella Ondulata 8	Undulated Washer 8
17	AFN.00286	Dado M 8 Metalblock	Nut M 8 Metalblock
18	AFN.00277	Rondella 8,5-14x2	Washer 8,5-14x2
19	AFN.00307	Vite M 8x 30 Esagonale	M 8x 30 Hexagonal Head Screw
20	AFN.00105	Rondella 6,5-12x1,5	Washer 6,5-12x1,5
21	AFN.00234	Dado M 6 Metalblock	Nut M 6 Metalblock
22	AFN.00183	Vite M 6x 20 Cilindrica	M 6x 20 Socket Head Screw
23	AFS.00336	Tubo Freno Tris OccV05-V07 Ant	Brake Tube Tris EyeV05-V07 FR.
24	AFN.00337	Fascetta Ferma Tubo Freno	Brake Tube Band
25	AFN.00359	Vite M 5x 12 Bombata	M 5x 12 Convex Head Screw
26	AFN.00361	Rondella 5,5-15x1,5	Washer 5,5-15x1,5
27	AFN.00360	Dado M 5 Autobloccante Basso	Nut M 5 Low Self-Locking
28	FK0.00372	Bussola Disco UP/V05 Ant.Co	Brake Disc UP/V05 Fr.BushingCo
29	AFS.01730	Disco Freno V05 Ant. Ghisa	Front Brake Disc V05-Iron
30	AFN.01750	Cuscinetto 6905 Mozzo Ant.	Bearing 6905 Front Hub
31	AFN.00008	Cuscinetto 6003 MozzoAnt.	Bearing 6003 Front Hub
32	AFS.01755	Mozzo Disco Ant.V05 25 Fe Nero	Front BrakeDisc Hub V05 D25 BL
33	FMN.00321	Mozzo Ant.125 Ruota Nero Co	Front Wheel Hub 125 Black Co
34	AFN.00316	Vite M 8x 22 Esagonale	M 8 x 22 Hex. Head Screw
35	FM0.0363D	Pinza Ant.UP/V05 Ghisa DX Comp	Caliper UP/V05 Fr.RH Comp.Iron
36	FM0.0363S	Pinza Ant.UP/V05 Ghisa SX Comp	Caliper UP/V05 Fr.LF Comp.Iron
37	AFS.00247	Chiavetta Assale 3 pioli NR	Rear Axle Key Black 3 pivot

A

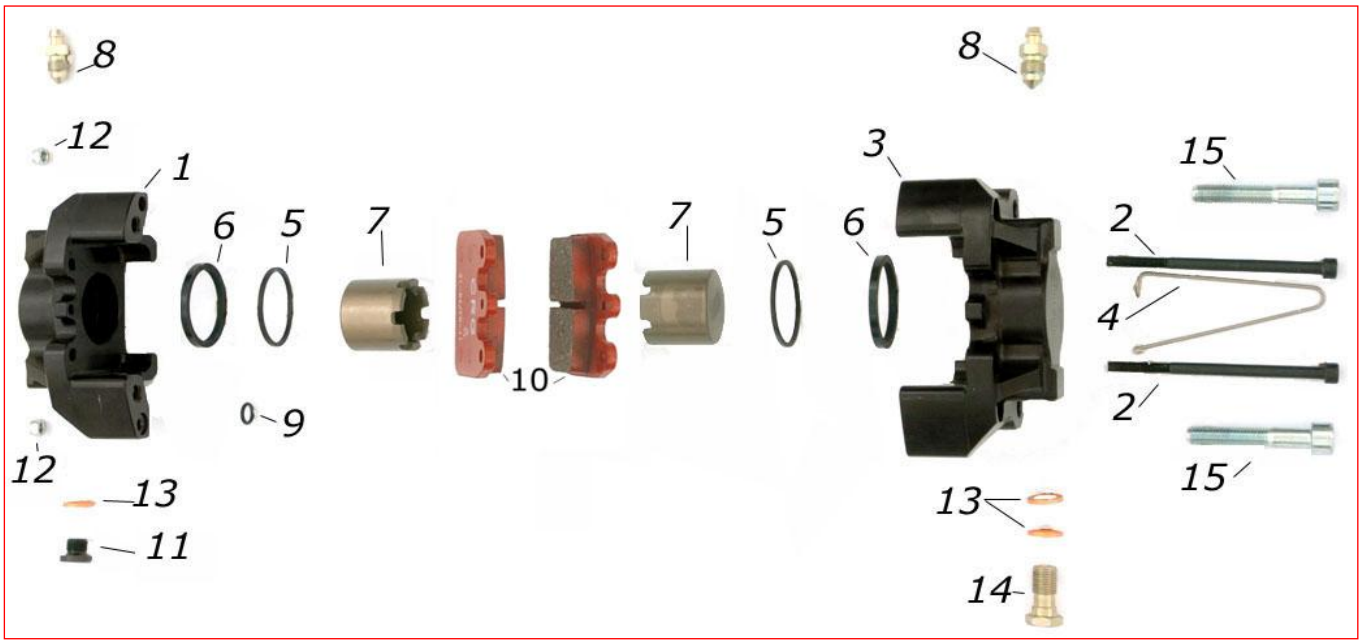

B

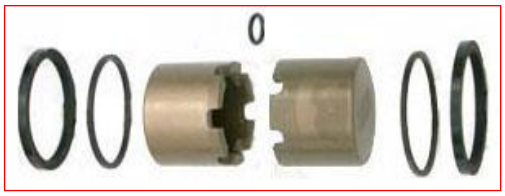

C

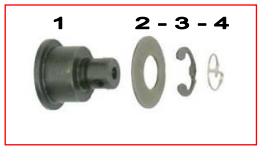

ES	COD	DESCRIZIONE	ITEMS
A	FM0.01727	Pinza Freno Post V05 G Co	Rear Brake Caliper V05 IRON Co
1	SDN.1678D	Semi Pinza V05 Post. Dx Nera	Half R.CaliperV05 Right Black
2	AFN.01679	Vite M 5x 80 Cilindrica	M 5 x 80 Socket Head Screw
3	SDN.1678S	Semi Pinza V05 Post. SX Nera	Half R.CaliperV05 Left Black
4	AFS.01682	Spina Sicurezza V05/V08 Post.	V05/V08 Rear Safety Pin
5	AFS.01681	Gommino V05/V08 Parapolvere	V05/V08 Dust Guard Seal
6	AFS.01051	Gommino V05/V08 Pinza Post.	V05/V08 Rear Brake Calip.Seal
7	SD1.01680	Pistoncino Pinza V05 Post.	V05 Rear Caliper Piston
8	SZ0.00184	Spurgo M10 UP/V04/V05	Bleeder M10 UP/V04/V05
9	AFN.00182	OR Pinza UP/V04/V05	OR > Caliper UP/V04/V05
10	AFS.01745	Pastiglia V05 Rossa Post	Rear Pad V05 C-Iiron Red
11	SBN.00369	Tappo M10 UP/V04/V05	Caliper Cap M10 UP/V04/V05
12	AFN.00360	Dado M 5 Autobloccante Basso	Nut M 5 Low Self-Locking
13	AFN.00186	Rondella Rame 10,5-14x2	Copper Washer 10,5-14x2
14	SZ0.00185	Raccordo M10 UP/V04/V05	Fitting M10 UP/V04/V05
15	AFN.00159	Vite M 8x 45 Cilindrica	M 8 x 45 Socket Head Screw
B	CRG.01681	Kit Revisione Pinza Post.V05	Kit V05 Brake Caliper Overhaul
C	FK0.01660	Bussola Disco V05 Post. Comp.	Rear BrakeDiscV05 Bushing Comp
1	SBN.01660	Bussola Disco V05 Post.Nera	Rear Brake DiscV05 Bushing Bl.
2	AFN.01677	Rondella Elastica Disco Fr.V05	Elastic Washer V05 Brake Disc
3	AFN.00231	Seeger D 8 Disco Freno	Seeger D 8 Brake Disc
4	AFS.00232	Spina Elastica D10 Disco Freno	Elastic Pin D10 Brake Disc

A

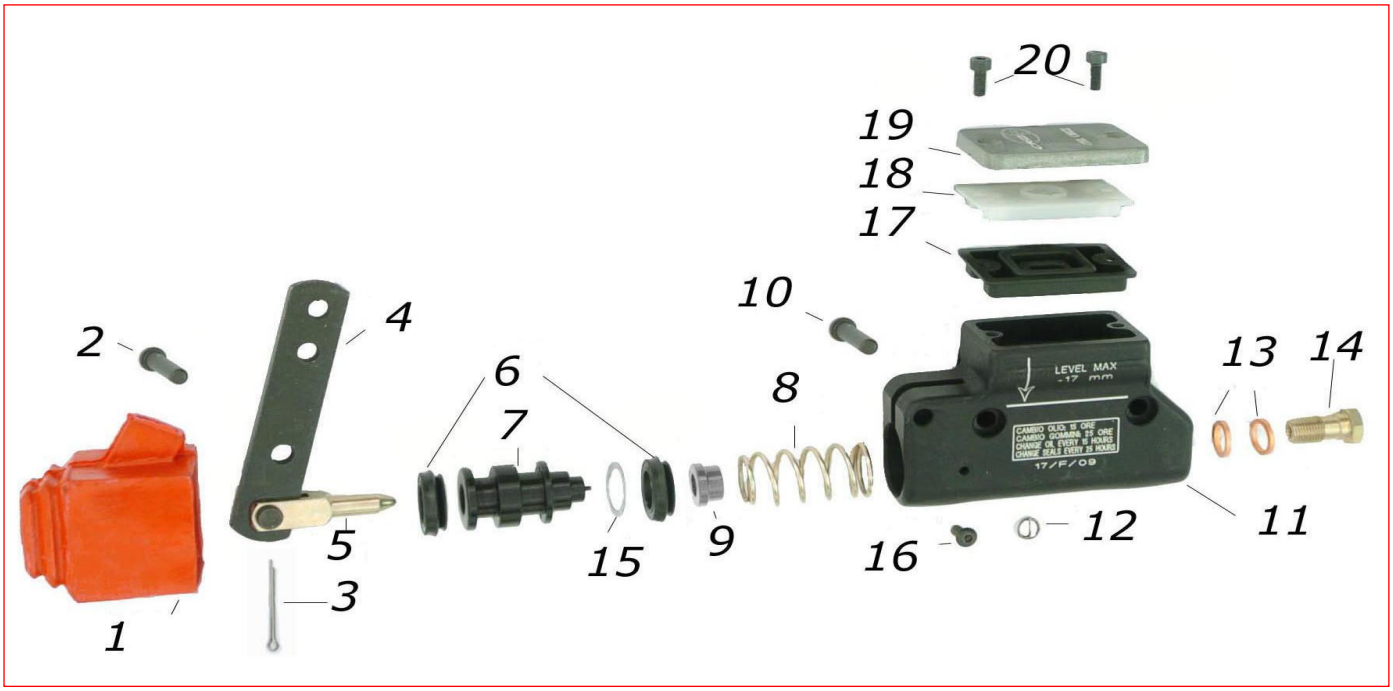

B

C

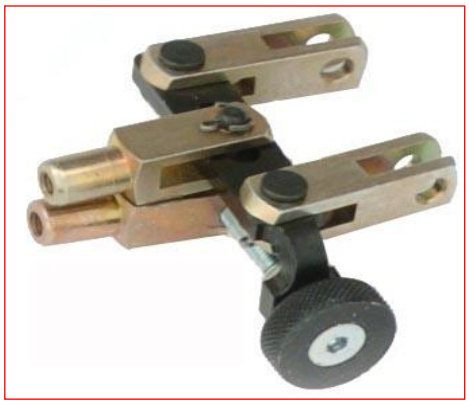

ES	COD	DESCRIZIONE	ITEMS
A	FM0.00329	Doppia PompaUP/V04+Rip.125	Doub.MasterCyl.UP/V04w/equa125
B	CRG.00192	Kit Revisione 1 PompaFr.UP/V04	Master Cyl.OverhaulKit 1UP/V04
C	FM0.00330	Ripartitore Frenata125cc	Brake Equalizer 125 complete
1	AFS.00199	Copripolevere Pompa Freni	Master Cylinder>Dust Cover
2	SBN.00200	Spina Pompa Freni 16 mm	Master Cylinder Pin 16mm
3	AFN.00201	Copiglia	Master Cylinder Split Pin
4	SBN.00197	Leva Pompa Freni Nera	Master Cylinder Lever Black
5	AFS.00196	Puntale Pompa Freni	Fork with Point
6	AFS.00194	Gommino Pompa UP/V04/V05	Master Cyl.Rubber UP/V04/V05
7	SAN.00210	Pistoncino Pompa UP/V04/V05	Master Cyl.Piston UP/V04/V05
8	SZ0.00193	Molla Pompa Freni UP/V04/V05	Master Cyl.Spring UP/V04/V05
9	SL1.00208	Tappo Molla Pompa UP/V04/V05	Master CYL.SPRING CAP UP/V04/V05
10	SBN.00202	Spina PompaFreni 35,5mm	Master Cylinder Pin 35,5mm
11	SAN.00192	Corpo Pompa Freno UP/V04	Master Cylinder UP/V04 Body
12	AFS.00981	Spina Elastica D 8	Elastic Pin D 8
13	AFN.00186	Rondella Rame 10,5-14x2	Copper Washer 10,5-14x2
14	SZ0.00185	Raccordo M10 UP/V04/V05	Fitting M10 UP/V04/V05
15	AFN.00195	Distanziale 14-20x0,5 Pompa Freno	Spacer 14-20x0,5 Master Cylin.
16	AFN.00207	Vite M 5x 8 Bombata	M 5 x 8 Convex Head Screw
17	AFS.00205	Membrana Pompa UP/V04	UP/V04>Gasket
18	AFS.00204	Tappo Membrana Pompa UP/V04	UP/V04>Tank Gasket CAP
19	CRG.00212	Coperchio Pompa Freno UP CRG	CRG Master Cylinder Up Cover
20	AFN.00206	Vite M 4x 12 Cilindrica	M 4 x 12 Socket Head Screw

D

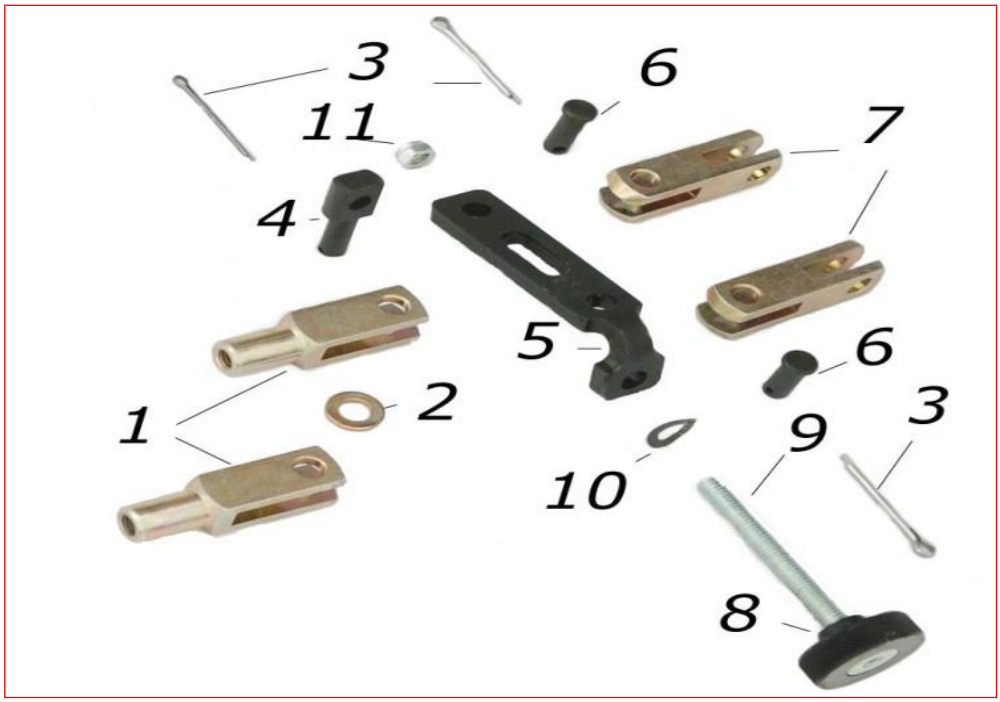

E

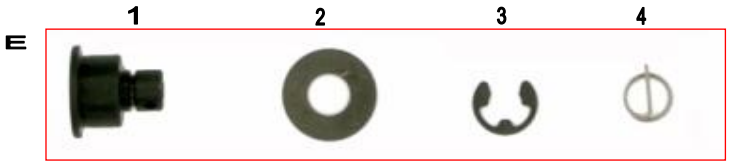

ES	COD	DESCRIZIONE	ITEMS
D	FM0.00330	Ripartitore Frenata125cc	Brake Equalizer 125 complete
1	AFS.00216	Forchetta Semplice STD	Simple Fork Standard
2	AFN.00105	Rondella 6,5-12x1,5	Washer 6,5-12x1,5
3	AFN.00201	Copiglia	Master Cylinder Split Pin
4	SBN.00335	Perno Registro Rip.125 Nero	Master Cyl.Div.125 Reg.Pivot
5	SBN.00334	Piastrina Ripartitore125 Nera	Master Cyl.Divider 125 Plate
6	SBN.00214	Spina Ripartitore 17,5mm Nera	Divider Pin 17,5mm BLACK
7	AFS.00215	Forchetta Doppia	Double Fork
8	SAN.00333	Pomolo Registro Ripartit. Nero	Divider Register Pommel Black
9	AFN.02322	Vite M 6x 70 Svasata	M 6 x 70 Countersunk HeadScrew
10	AFN.00331	Rondella Ondulata 6	Undulated Washer 6
11	AFN.00106	Dado M 6 Autoblock	Nut M 6 Low Self-locking
E	FK0.00372	Bussola Disco UP/V05 Ant.Co	Brake Disc UP/V05 Fr.Bushing Co
1	SBN.00372	Bussola Disco UP/V05 Ant.	Brake Disc UP/V05 FrontBushing
2	AFN.00230	Rondella Elastica Disco Freno	Elastic Washer > Brake Disc
3	AFN.00231	Seeger D 8 DiscoFreno	Seeger D 8 Brake Disc
4	AFS.00232	Spina Elastica D10 DiscoFreno	Elastic Pin D10 Brake Disc

A

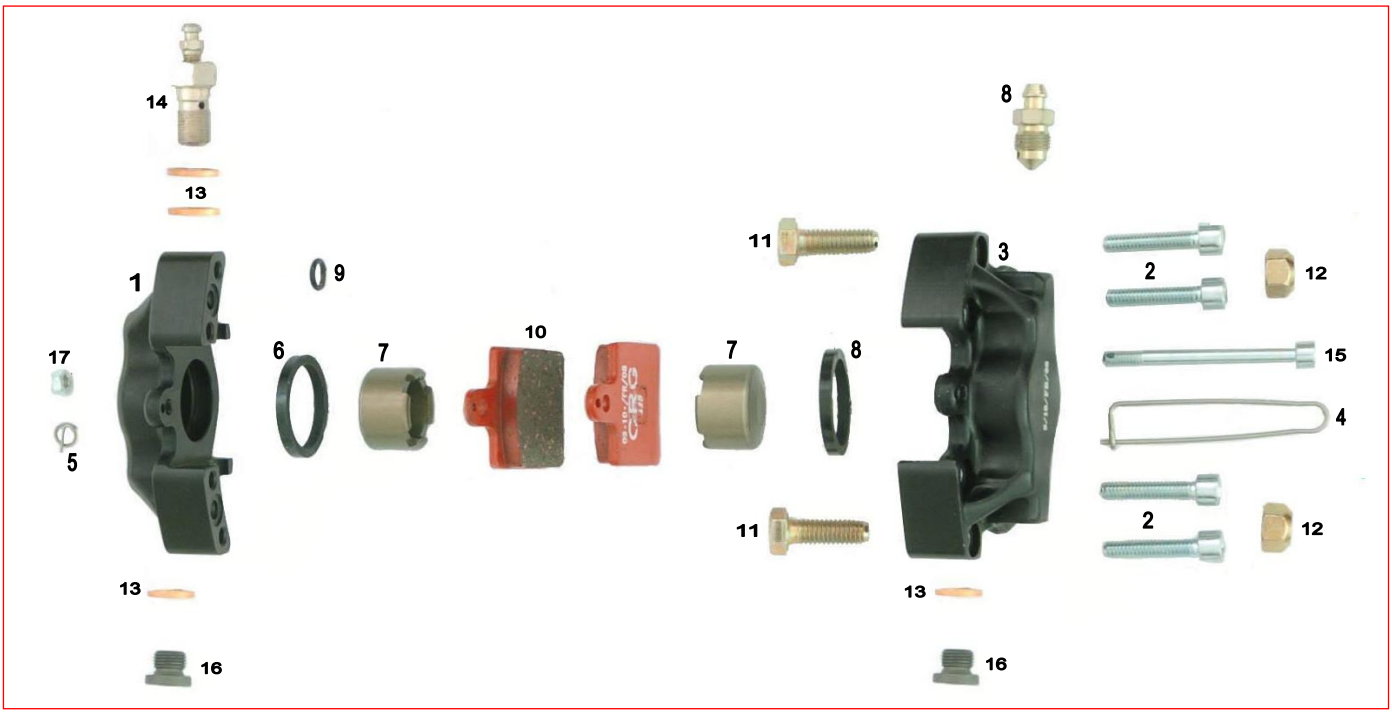

B

ES	COD	DESCRIZIONE	ITEMS
A	FM0.0363D	Pinza Ant.UP/V05 Ghisa DX Comp	Caliper UP/V05 Fr.RH Comp.Iron
A	FM0.0363S	Pinza Ant.UP/V05 Ghisa SX Comp	Caliper UP/V05 Fr.LF Comp.Iron
1	SDN.0364D	Semi Pinza UP DX Nera	Half Up Caliper Right Black
1	SDN.0364S	Semi Pinza UP SX Nera	Half Up Caliper Left Black
2	AFN.00368	Vite M 6x 40 Cilindrica	M 6 x 40 Socket Head Screw
3	SDN.0365D	Semi Pinza UP DX Orecchie Nera	Half Up Caliper RH w/ear Black
3	SDN.0365S	Semi Pinza UP SX Orecchie Nera	Half Up Caliper LF w/ear Black
4	AFS.00187	Spina Sicurezza UP/V04	UP/V04>Safety Pin
5	AFS.00203	Spina Elastica D 6	Elastic Pin D 6
6	AFS.00179	Gommino Pinza UP/V04/V05 Ant.	UP/V04/V05 Fr. Piston Seal
7	SD1.00370	Pistoncino PinzaUP/V04-05-08 A	UP/V04/V05/V08 Fr.Brake Piston
8	SZ0.00184	Spurgo M10 UP/V04/V05	Bleeder M10 UP/V04/V05
9	AFN.00182	OR Pinza UP/V04/V05	OR > Caliper UP/V04/V05
10	AFS.00366	Pastiglia Fr.NA/UP/V05 Ant.GH.	Brake Pad NA/UP/V05 Front Iron
11	AFN.00107	Vite M 8x 25 Esagonale	M 8 x 25 Socket Head Screw
12	AFN.00286	Dado M 8 Metalblock	Nut M 8 Metalblock
13	AFN.00186	Rondella Rame 10,5-14x2	Copper Washer 10,5-14x2
14	FM0.00308	Raccordo Combinato Comp	Bleeder Fitting Complete
15	SL1.00367	Vite M 5x 55 Cilindr. Forata	M 5x55 Holed Socket Screw
16	SBN.00369	Tappo M10 UP/V04/V05	Caliper Cap M10 UP/V04/V05
17	AFN.00360	Dado M 5 Autobloccante Basso	Nut M 5 Low Self-Locking
B	CRG.00364	Kit Revisione Pinza UP/V05 Ant	Brake Caliper OverhaulUP/V05 F

1-2-3-4

1-2-3-5

6

7

8

9

10

11
x1

12

13

15

16
17
18
19

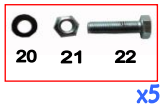
20
21
22
x5

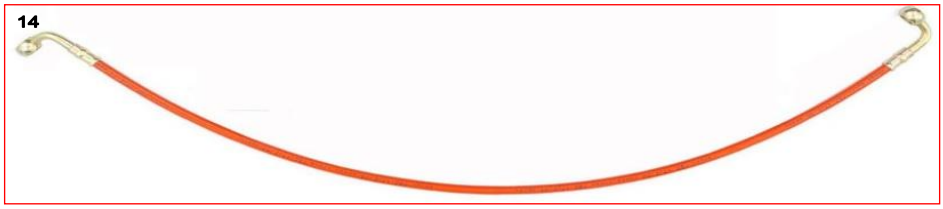
14

24

23

25
26
27

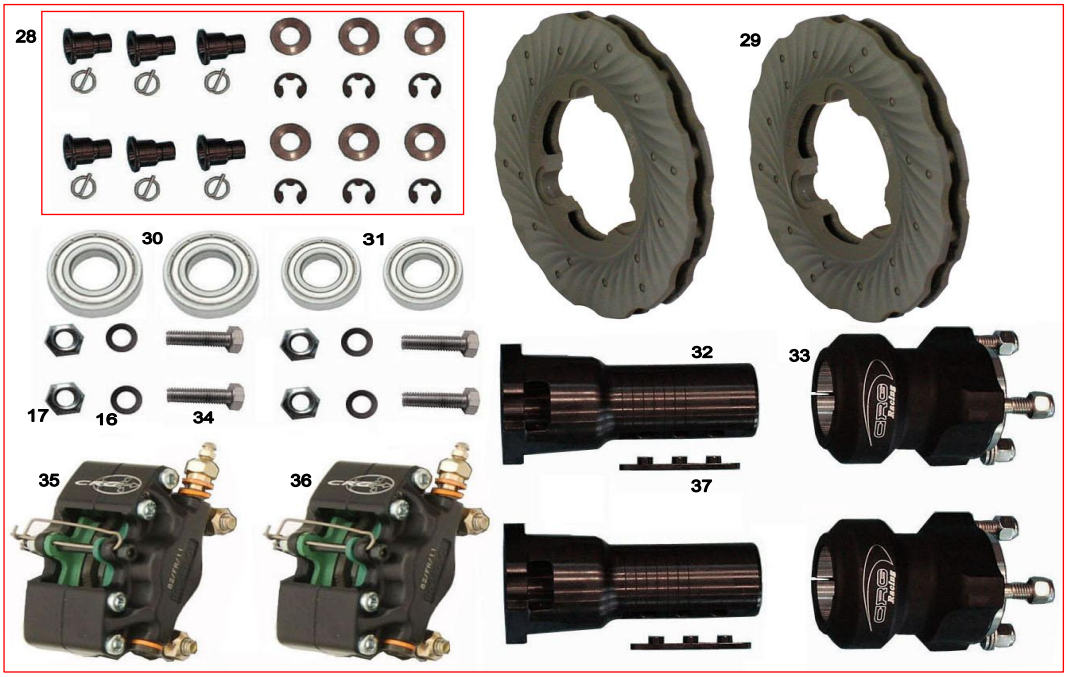
28
29
30
31
17
16
34
32
33
37
35
36

ES	COD	D E S C R I Z I O N E	I T E M S
	CRG.01407	Imp. V05 D KZ D50 Co (no Fuselli)	Brake Syst. V05 D KZ Cc(NOstub axles)
1	AFS.00216	Forchetta Semplice STD	Simple Fork Standard
2	AFS.00224	Clift STD	Clift STD
3	AFN.00093	Dado M 6	Nut M 6
4	SBN.00223	Asta Freno cm.42 Nera	Draw Pin cm.42 Black
5	AFS.00227	Cavo Sicurezza Cm.41,5	Safety Cable Cm.41,5
6	FMN.00238	Moz. Disco Post.All.50 V04/V05 Co	Rear Brake Disc Hub V04/V05 50 Al.
7	FC0.01641	Piastra Supp.Pinza V05 Post.	Rear Brake Caliper PlateV05
8	FC0.02869	Piastra Supp.Pinza V05 Post.2012	Rear Brake Caliper PlateV05 2012
9	AFS.01591	Disco Freno V05 Post.Duralcan	Rear Brake Disc V05 Duralcan
10	SAN.01592	Flangia Disco V05 Posteriore	Rear Brake Disc Flange V05
11	FM0.01678	Pinza Posteriore V05 Co.Dural.	Rear Brake Caliper V05 Co.Dur.
12	FK0.01660	Bussola Disco V05 Post. Comp.	Brake DiscV05 Bushing Comp
13	FM0.00329	Doppia PompaUP/V04+Rip.125	Doub.MasterCyl.UP/V04w/equa125
14	AFS.00240	Tubo Freno V05 Post Occ.mm 720	Brake Tube V05 Rear Eye.mm 720
15	FAN.01462	Distanziale Pinza xIbrido	Caliper Spacer BLACK x Hybrid
16	AFN.00047	Rondella Ondulata 8	Undulated Washer 8
17	AFN.00286	Dado M 8 Metalblock	Nut M 8 Metalblock
18	AFN.00277	Rondella 8,5-14x2	Washer 8,5-14x2
19	AFN.00307	Vite M 8x 30 Esagonale	M 8x 30 Exagon. Head Screw
20	AFN.00105	Rondella 6,5-12x1,5	Washer 6,5-12x1,5
21	AFN.00234	Dado M 6 Metalblock	Nut M 6 Metalblock
22	AFN.00183	Vite M 6x 20 Cilindrica	M 6x 20 Socket Head Screw
23	AFS.00336	Tubo Freno Tris OccV05-V07 Ant.	Brake Tube Tris EyeV05-V07 FR.
24	AFN.00337	Fascetta Ferma Tubo Freno	Brake Tube Band
25	AFN.00359	Vite M 5x 12 Bombata	M 5x 12 Convex Head Screw
26	AFN.00361	Rondella 5,5-15x1,5	Washer 5,5-15x1,5
27	AFN.00360	Dado M 5 Autobloccante Basso	Nut M 5 Low Self-Locking
28	FK0.00372	Bussola Disco UP/V05 Ant.Co	Brake Disc UP/V05 Fr.BushingCO
29	AFS.01622	Disco Freno V05 Dural Ant.	Brake Disc Front V05 Dural
30	AFN.01750	Cuscinetto 6905 Mozzo Ant.	Bearing 6905 Front Hub
31	AFN.00008	Cuscinetto 6003 MozzoAnt.	Bearing 6003 Front Hub
32	AFS.01755	Mozzo Disco Ant.V05 25 FE Nero	Front BrakeDisc Hub V05 D25 BL
33	FMN.00321	Mozzo Ant.125 Ruota Nero Co	Front Wheel Hub 125 Black Co
34	AFN.00316	Vite M 8x 22 Esagonale	M 8 x 22 Hex. Head Screw
35	FM0.1407D	Pinza Anteriore UP/V05 D DX	Front Caliper UP/V05 D RH
36	FM0.1407S	Pinza Anteriore UP/V05 D SX	Front Caliper UP/V05 D LF
37	AFS.00247	Chiavetta Assale 3 pioli NR	Rear Axle Key Black 3 pivot

A

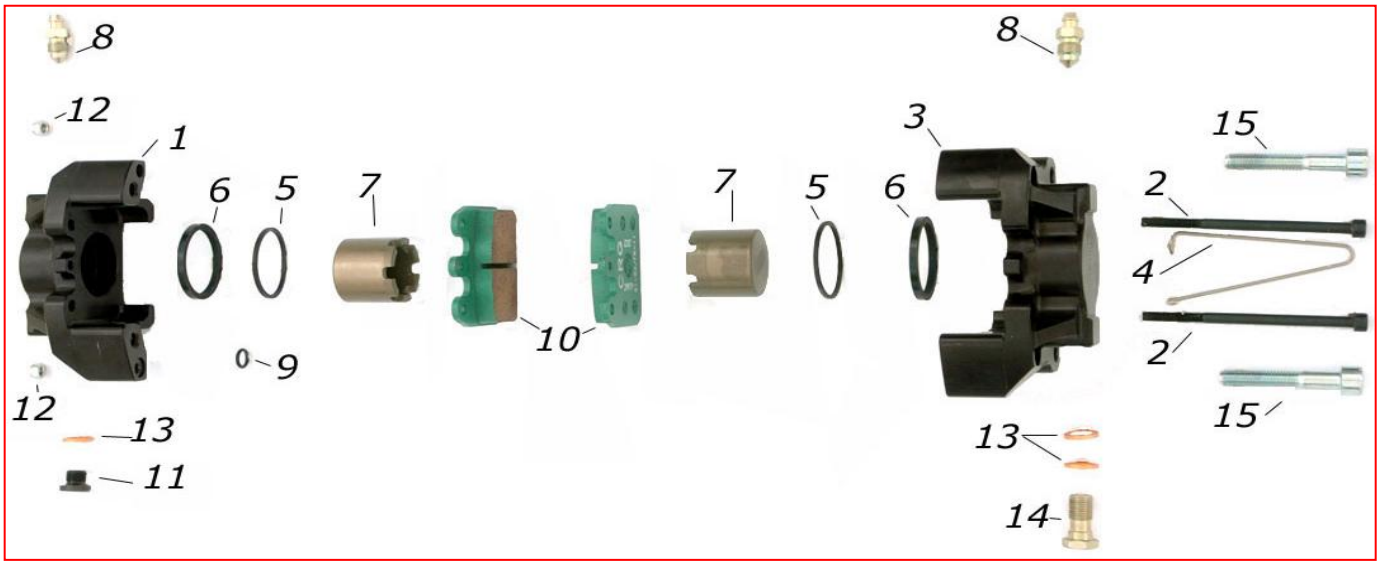

B

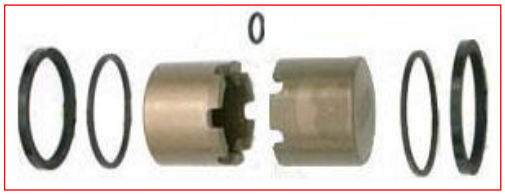

C

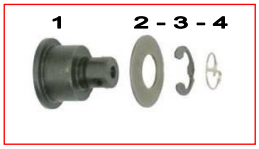

ES	COD	DESCRIZIONE	ITEMS
A	FM0.01678	Pinza Posteriore V05 Co.Dural.	Rear Brake Caliper V05 Co.Dur.
1	SDN.1678D	Semi Pinza V05 Post. DX Nera	Half R.CaliperV05 Right Black
2	AFN.01679	Vite M 5x 80 Cilindrica	M 5 x 80 Socket Head Screw
3	SDN.1678S	Semi Pinza V05 Post. SX Nera	Half R.CaliperV05 Left Black
4	AFS.01682	Spina Sicurezza V05/V08 Post.	V05/V08 Rear Safety Pin
5	AFS.01681	Gommino V05/V08 Parapolvere	V05/V08 Dust Guard Seal
6	AFS.01051	Gommino V05/V08 Pinza Post.	V05/V08 Rear Brake Calip.Seal
7	SD1.01680	Pistoncino Pinza V05 Post.	V05 Rear Caliper Piston
8	SZ0.00184	Spurgo M10 UP/V04/V05	Bleeder M10 UP/V04/V05
9	AFN.00182	OR Pinza UP/V04/V05	OR > Caliper UP/V04/V05
10	AFS.01624	Pastiglia V05 Verde Post	Rear Pad V05 Green-Dural
11	SBN.00369	Tappo M10 UP/V04/V05	Caliper Cap M10 UP/V04/V05
12	AFN.00360	Dado M 5 Autobloccante Basso	Nut M 5 Low Self-Locking
13	AFN.00186	Rondella Rame 10,5-14x2	Copper Washer 10,5-14x2
14	SZ0.00185	Raccordo M10 UP/V04/V05	Fitting M10 UP/V04/V05
15	AFN.00159	Vite M 8x 45 Cilindrica	M 8 x 45 Socket Head Screw
16	CRG.01681	Kit Revisione Pinza Post.V05	KIT V05 Brake Caliper Overhaul
B	FK0.01660	Bussola Disco V05 Post. Comp.	Rear BrakeDiscV05 Bushing Comp
1	SBN.01660	Bussola Disco V05 Post.NERA	Rear Brake DiscV05 Bushing Bl.
2	AFN.01677	Rondella Elastica Disco Fr.V05	Elastic Washer V05 Brake Disc
3	AFN.00231	Seeger D 8 Disco Freno	Seeger D 8 Brake Disc
4	AFS.00232	Spina Elastica D10 Disco Freno	Elastic Pin D10 Brake Disc

A

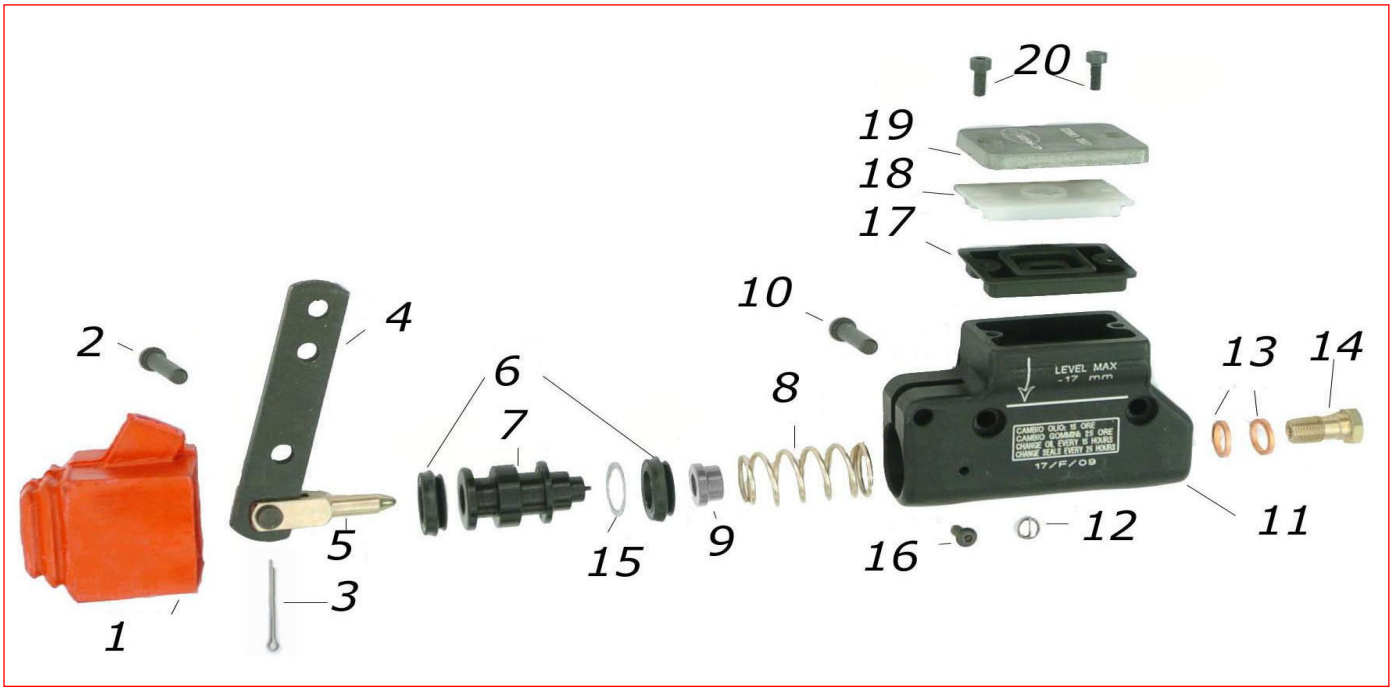

B

C

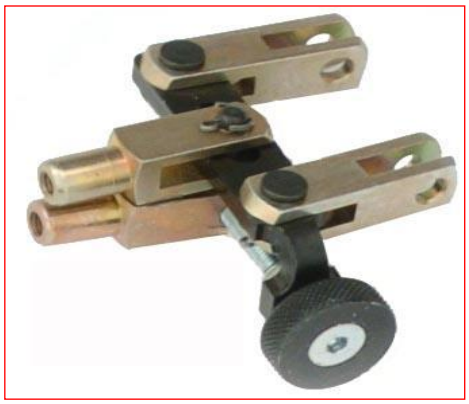

ES	COD	DESCRIZIONE	ITEMS
A	FM0.00329	Doppia PompaUP/V04+Rip.125	Doub.MasterCyl.UP/V04w/equa125
B	CRG.00192	Kit Revisione 1 PompaFr.UP/V04	Master Cyl.OverhaulKit 1UP/V04
C	FM0.00330	Ripartitore Frenata125cc	Brake Equalizer 125 complete
1	AFS.00199	Copripolevere Pompa Freni	Master Cylinder>Dust Cover
2	SBN.00200	Spina Pompa Freni 16 mm	Master Cylinder Pin 16mm
3	AFN.00201	Copiglia	Master Cylinder Split Pin
4	SBN.00197	Leva Pompa Freni Nera	Master Cylinder Lever Black
5	AFS.00196	Puntale Pompa Freni	Fork with Point
6	AFS.00194	Gommino Pompa UP/V04/V05	Master Cyl.Rubber UP/V04/V05
7	SAN.00210	Pistoncino Pompa UP/V04/V05	Master Cyl.Piston UP/V04/V05
8	SZ0.00193	Molla Pompa Freni UP/V04/V05	Master Cyl.Spring UP/V04/V05
9	SL1.00208	Tappo Molla Pompa UP/V04/V05	Master CYL.SPRING CAP UP/V04/V05
10	SBN.00202	Spina PompaFreni 35,5mm	Master Cylinder Pin 35,5mm
11	SAN.00192	Corpo Pompa Freno UP/V04	Master Cylinder UP/V04 Body
12	AFS.00981	Spina Elastica D 8	Elastic Pin D 8
13	AFN.00186	Rondella Rame 10,5-14x2	Copper Washer 10,5-14x2
14	SZ0.00185	Raccordo M10 UP/V04/V05	Fitting M10 UP/V04/V05
15	AFN.00195	Distanziale 14-20x0,5 Pompa Freno	Spacer 14-20x0,5 Master Cylin.
16	AFN.00207	Vite M 5x 8 Bombata	M 5 x 8 Convex Head Screw
17	AFS.00205	Membrana Pompa UP/V04	UP/V04>Gasket
18	AFS.00204	Tappo Membrana Pompa UP/V04	UP/V04>Tank Gasket CAP
19	CRG.00212	Coperchio Pompa Freno UP CRG	CRG Master Cylinder Up Cover
20	AFN.00206	Vite M 4x 12 Cilindrica	M 4 x 12 Socket Head Screw

D

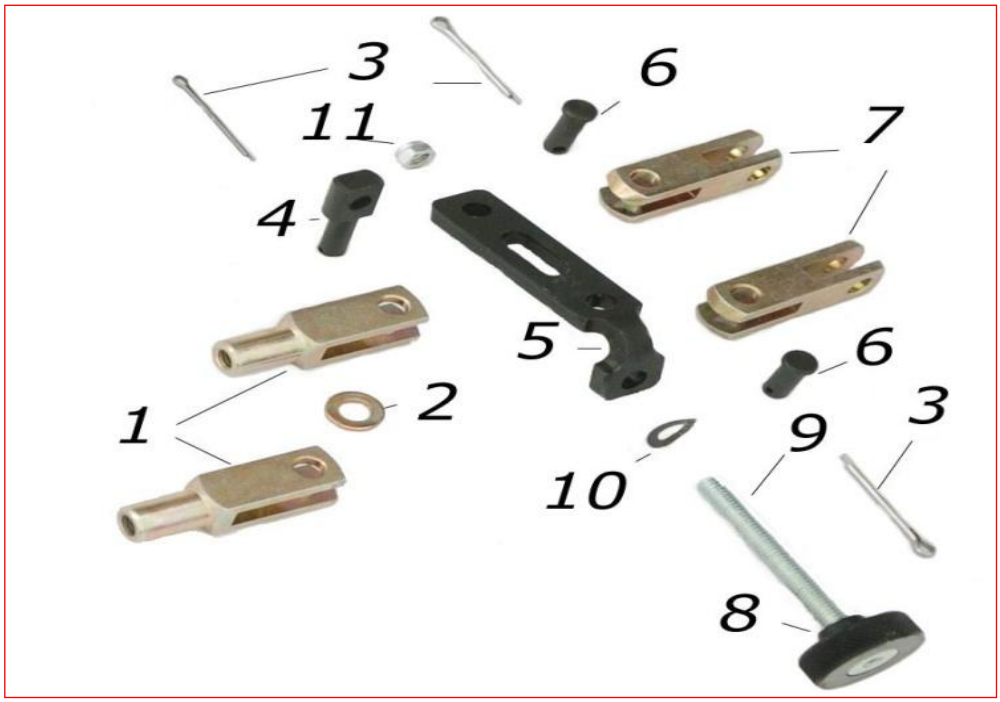

E

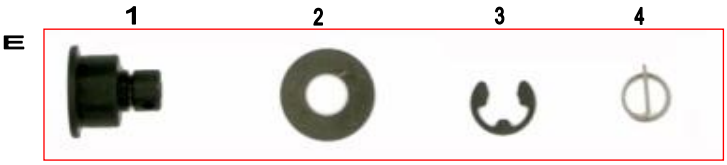

ES	COD	DESCRIZIONE	ITEMS
D	FM0.00330	Ripartitore Frenata125cc	Brake Equalizer 125 complete
1	AFS.00216	Forchetta Semplice STD	Simple Fork Standard
2	AFN.00105	Rondella 6,5-12x1,5	Washer 6,5-12x1,5
3	AFN.00201	Copiglia	Master Cylinder Split Pin
4	SBN.00335	Perno Registro Rip.125 Nero	Master Cyl.Div.125 Reg.Pivot
5	SBN.00334	Piastrina Ripartitore125 Nera	Master Cyl.Divider 125 Plate
6	SBN.00214	Spina Ripartitore 17,5mm Nera	Divider Pin 17,5mm BLACK
7	AFS.00215	Forchetta Doppia	Double Fork
8	SAN.00333	Pomolo Registro Ripartit. Nero	Divider Register Pommel Black
9	AFN.02322	Vite M 6x 70 Svasata	M 6 x 70 Countersunk HeadScrew
10	AFN.00331	Rondella Ondulata 6	Undulated Washer 6
11	AFN.00106	Dado M 6 Autoblock	Nut M 6 Low Self-locking
E	FK0.00372	Bussola Disco UP/V05 Ant.Co	Brake Disc UP/V05 Fr.Bushing Co
1	SBN.00372	Bussola Disco UP/V05 Ant.	Brake Disc UP/V05 FrontBushing
2	AFN.00230	Rondella Elastica Disco Freno	Elastic Washer > Brake Disc
3	AFN.00231	Seeger D 8 DiscoFreno	Seeger D 8 Brake Disc
4	AFS.00232	Spina Elastica D10 DiscoFreno	Elastic Pin D10 Brake Disc

A

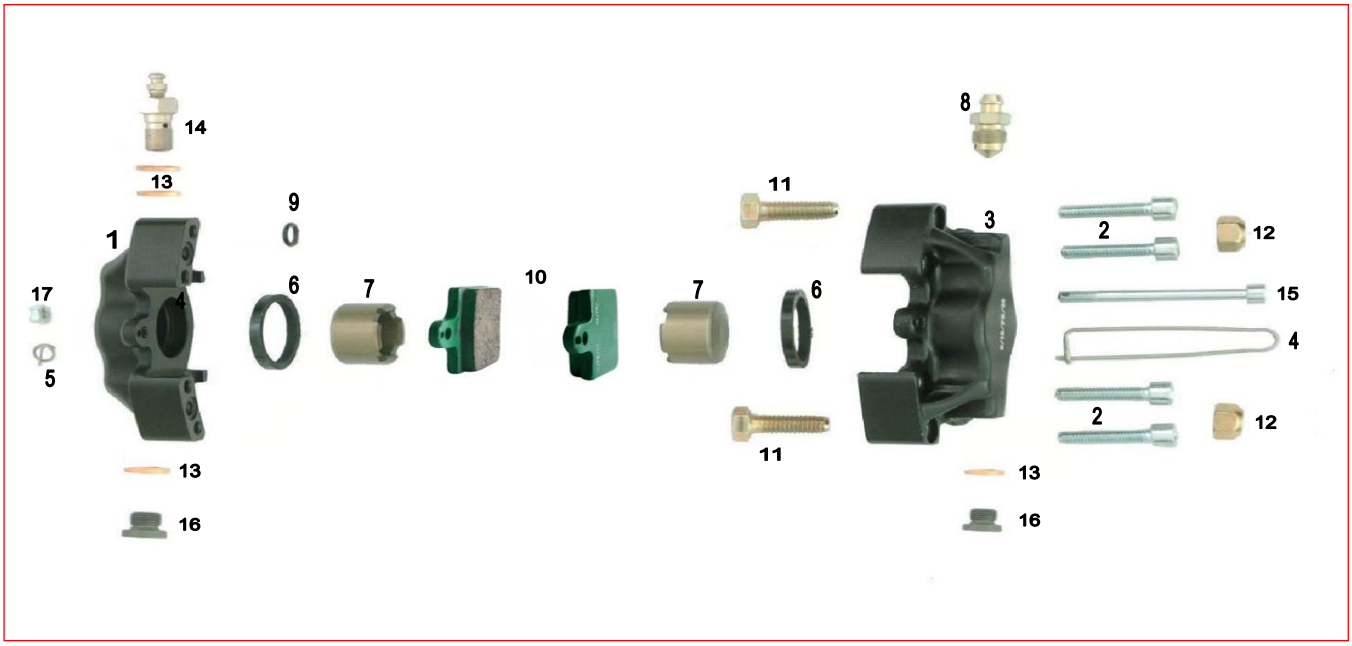

B

ES	COD	DESCRIZIONE	ITEMS
A	FM0.1407D	Pinza Ant. UP/V05 D Dx Co	Front Caliper UP/V05 D RH Co
A	FM0.1407S	Pinza Ant. UP/V05 D SX Co	Front Caliper UP/V05 D LF Co
1	SDN.0364D	Semi Pinza UP DX Nera	Half Up Caliper Right Black
1	SDN.0364S	Semi Pinza UP SX Nera	Half Up Caliper Left Black
2	AFN.00368	Vite M 6x 40 Cilindrica	M 6 x 40 Socket Head Screw
3	SDN.0365D	Semi Pinza UP DX Orecchie Nera	Half Up Caliper RH w/ear Black
3	SDN.0365S	Semi Pinza UP SX Orecchie Nera	Half Up Caliper LF w/ear Black
4	AFS.00187	Spina Sicurezza UP/V04	UP/V04>Safety Pin
5	AFS.00203	Spina Elastica D 6	Elastic Pin D 6
6	AFS.00179	Gommino Pinza UP/V04/V05 Ant.	UP/V04/V05 Fr. Piston Seal
7	SD1.00370	Pistoncino PinzaUP/V04-05-08 A	UP/V04/V05/V08 Fr.Brake Piston
8	SZ0.00184	SPurgo M10 UP/V04/V05	Bleeder M10 UP/V04/V05
9	AFN.00182	OR Pinza UP/V04/V05	OR > Caliper UP/V04/V05
10	AFS.01046	Past. Freno UP-V05 Ant.Verde	Front Brake Pad UP-V05 Green
11	AFN.00107	Vite M 8x 25 Esagonale	M 8 x 25 Socket Head Screw
12	AFN.00286	Dado M 8 Metalblock	Nut M 8 Metalblock
13	AFN.00186	Rondella Rame 10,5-14x2	Copper Washer 10,5-14x2
14	FM0.00308	Raccordo Combinato Completo	Bleeder Fitting Complete
15	SL1.00367	Vite M 5x 55 Cilindrica Forata	M 5x55 Holed Socket Screw
16	SBN.00369	Tappo M10 UP/V04/V05	Caliper Cap M10 UP/V04/V05
17	AFN.00360	Dado M 5 Autobloccante Basso	Nut M 5 Low Self-Locking
B	CRG.00364	Kit Revisione Pinza UP/V05 Ant	Brake Caliper Overhaul UP/V05 F

A

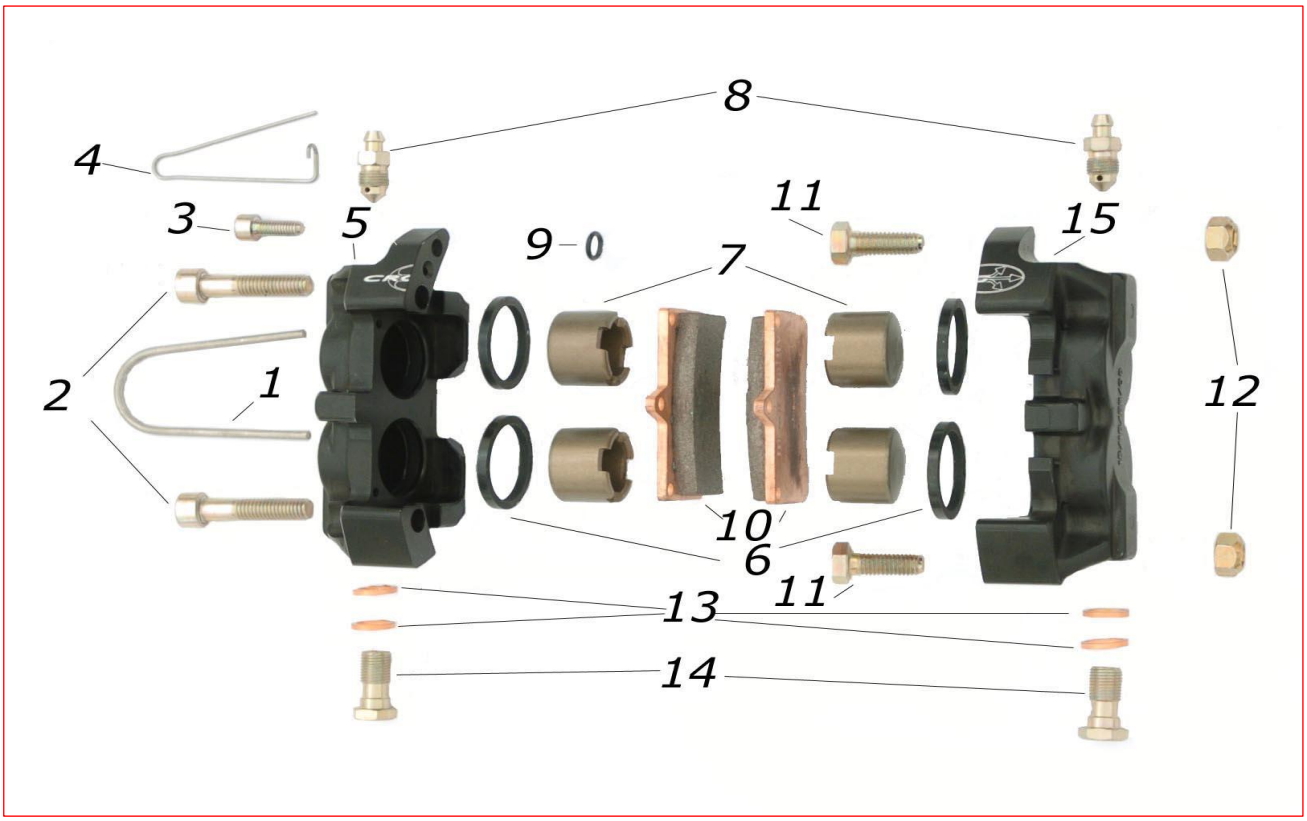

ES	COD	DESCRIZIONE	ITEMS
A	AFS.01682	Spina Sicurezza Pinza Post.V05/V	V05/V08 Rear Safety Pin
1	AFN.00132	Vite M 8x 40 Cilindrica	M 8x 40 Socket Head Screw
2	AFN.01585	Vite M 8x 16 Cilindrica	M 6x 16 Socket Head Screw
3	AFS.00187	Spina Sicurezza Ant.V05/UP/V05	Safety Pin UP/V04/V05 Front
4	SDN.0178D	Semi Pinza V04 Posteriore Dx Nera	Half R.CaliperV04 Right Black
5	AFS.00179	Gommino Pinza Ant.V05/UP/V04	Piston Seal UP/V04/V05 Front
6	SD1.00370	Pistoncino Pinza Anteriore V05/UP/V	V05/V08 Front Brake Caliper Piston
7	SZ0.00184	Spurgo M10 UP/V04/V05	Bleeder M10 UP/V04/V05
8	AFN.00182	Or Pinza UP/V04/V05	Caliper O-Ring UP/V04/V05
9	AFS.00180	Pastiglia Freno Posteriore V04 Std	Rear Brake Pad V04 Std
10	AFN.00107	Vite M 8X 25 Esagonale	M 8 x 25 Socket Head Screw
11	AFN.00286	Dado M 8 Metalblock	Nut M 8 Metalblock
12	AFN.00186	Rondella 10,5-14x2 Rame	Copper Washer 10,5-14x2
13	SZ0.00185	Raccordo M10 UP/V04/V05	Fitting M10 UP/V04/V05
14	SDN.0178S	Semi Pinza V04 Pos.Sx Nera	Half R.CaliperV04 Left Black

1-2-3-4

1-2-3-5

6

7

8

9

10

11

12

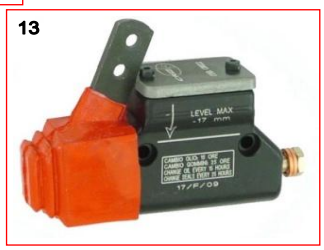
13

14

16 17 18 19

20 21 22

24 25 26

27

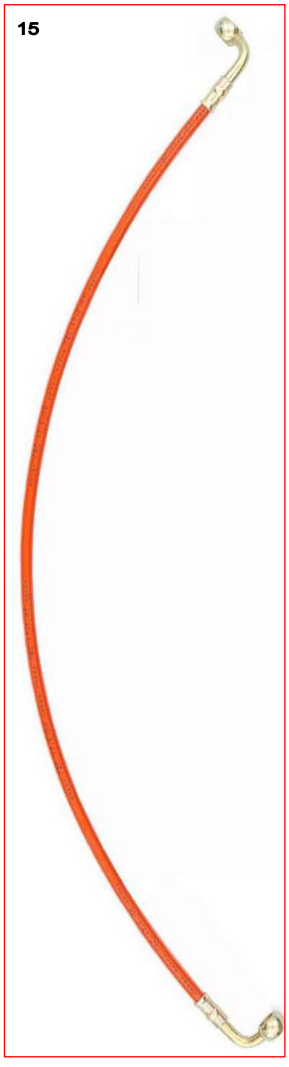
15

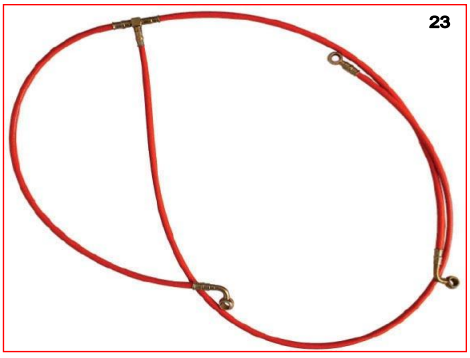
23

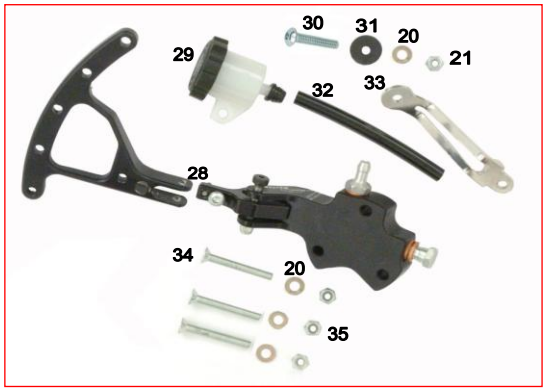
30 31 20 21
29
32 33
28
34 20
35

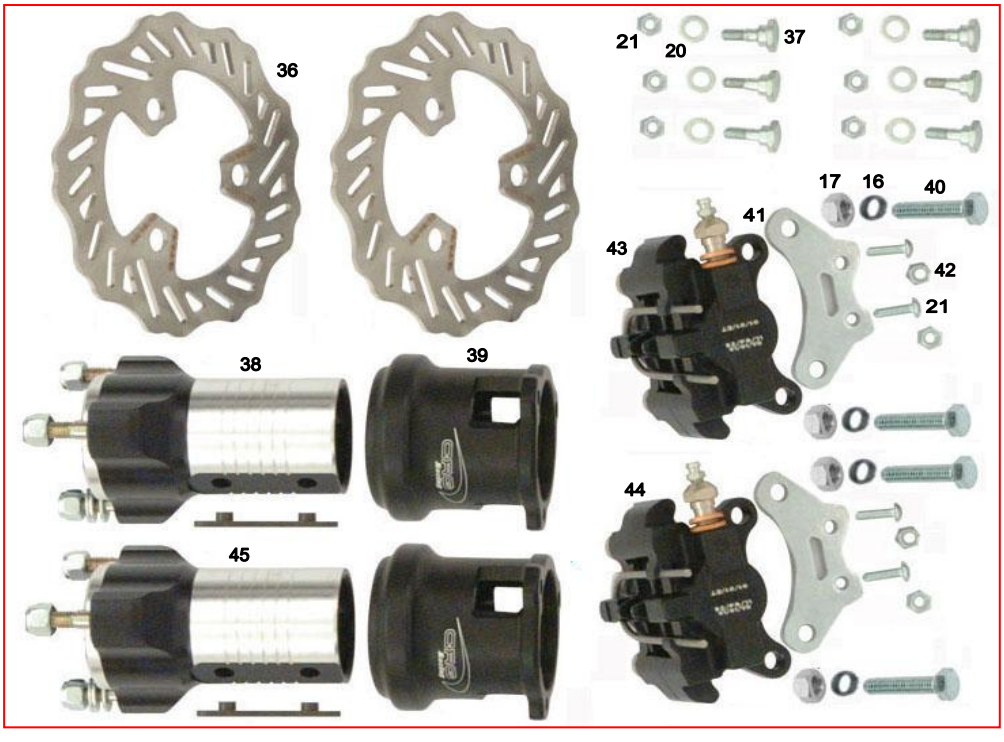
36
21 20 37
17 16 40
41
43
42
21
38 39
44
45

ES	COD	D E S C R I Z I O N E	I T E M S
	CRG.01909	Imp.V06 KF2 Anteriore +Posteriore	Brake Sys.V06 KF2 Rear + Front
	CRG.01907	Impianto V06 Anteriore Co.	Breake Sys.V06 Front Co.
1	AFS.00216	Forchetta Semplice STD	Simple Fork Standard
2	AFS.00224	Clift STD	Clift STD
3	AFN.00093	Dado M 6	Nut M 6
4	SBN.00918	Asta Freno cm.45 Nera	Draw Pin cm.45 Black
5	AFS.00809	Cavo Sicurezza Cm.44	Safety Cable Cm.45
6	FMN.00238	Moz.Disco Post.ALL.50V04/V05	Rear Brake Disc Hub V04/V05 50 Al.
7	FC0.01641	Piastra Supp.Pinza V05 Post.	Rear Brake Caliper PlateV05
8	FC0.02869	Piastra Supp.Pinza V05 Post.2012	Rear Brake Caliper PlateV05 2012
9	AFS.01727	Disco Freno V05 Post.Ghisa	Rear Brake Disc V05 Iron
10	SAN.01592	Flangia Disco V05 Posteriore	Rear Brake Disc Flange V05
11	FM0.01727	Pinza Freno Post V05 G Co	Rear Brake Caliper V05 Iron Co
12	FK0.01660	Bussola Disco V05 Post. Comp.	Rear BrakeDiscV05 Bushing Comp
13	FM0.00192	Pompa Freni UP/V04/V05 CRG Co	Rear Master Cyl. V05 CRG Co
14	FAN.01462	Distanziale Pinza xIbrido	Caliper Spacer x Hybrid
15	AFS.00240	Tubo Freno V05 PostOcc.mm720	Brake Tube V05 Rear Eye.mm 720
16	AFN.00047	Rondella Ondulata 8	Undulated Washer 8
17	AFN.00286	Dado M 8 Metalblock	Nut M 8 Metalblock
18	AFN.00277	Rondella 8,5-14x2	Washer 8,5-14x2
19	AFN.00307	Vite M 8x 30 Esagonale	M 8x 30 Hexagonal Head Screw
20	AFN.00105	Rondella 6,5-12x1,5	Washer 6,5-12x1,5
21	AFN.00234	Dado M 6 Metalblock	Nut M 6 Metalblock
22	AFN.00183	Vite M 6x 20 Cilindrica	M 6x 20 Socket Head Screw
23	AFS.00862	Tubo Freno Tris Occh.V06 Ant.	Brake Tube Tris Eye.V06 Front
24	AFN.00359	Vite M 5x 12 Bombata	M 5x 12 Convex Head Screw
25	AFN.00361	Rondella 5,5-15x1,5	Washer 5,5-15x1,5
26	AFN.00360	Dado M 5 Autobloccante Basso	Nut M 5 Low Self-Locking
27	AFN.00337	Fascetta Ferma Tubo Freno	Brake Tube Band
28	FK0.01909	Pompa Freno V06 FA C/Leva	Master Cyl. V06 FBS W/Lever
29	AFS.01799	Serbatoio Pompa Radiale Brembo	Radial Tank Pump Brembo
30	AFN.02144	Vite M 6x 20 Bombata	M 6x 20 Convex Head Screw
31	AFS.00258	Gommino Pianale	Floor Tray Rubber
32	SL1.00139	Tubo Serb. Pompa RadialeFA	Tube xMaster Cyl.Tank FBS
33	AML.01906	Supporto Serbatoio Fa	FBS Recovery Tank Support
34	AFN.00294	Vite M 6x 45 Cilindrica	M 6 x 45 Socket HeadScrew
35	AFN.00106	Dado M 6 Autobloccante Basso	Nut M 6 Low Self-locking
36	AML.01859	Disco Freno V06 Fa	Front Brake System V06 Disc
37	SBN.01866	Bussola Disco FA/V06	V06 Brake Disc Bushing
38	FMN.01865	Mozzo Ruota Ant. All. V06 D25	Front Wheel Hub All V06 25 Co
39	FMN.01867	Mozzo Disco Ant. All. V06	All. Front Bbrake Disc Hub V06
40	AFN.00316	Vite M 8x 22 Esagonale	M 8 x 22 Hex. Head Screw
41	FC0.01860	Piastra Supp.Pinza V06 FA Crom	Brake Caliper Plate V06 Chrom.
42	AFN.00016	Vite M 6x 14 Bombata	M 6x 14 Convex Head Screw
43	FM0.0305D	Pinza Ant.V04 / V06 DX Co	Front Brake Cal.V04/V06 RH Co
44	FM0.0305S	Pinza ANT.V04 / V06 SX Co	Front Brake Cal.V04/V06 LF Co
45	AFS.00246	Chiavetta Assale 2 pioli NR	Rear Axle Key Black 2 pivot

POMPA FRENI / FM0.01909 / MASTER CYLINDER

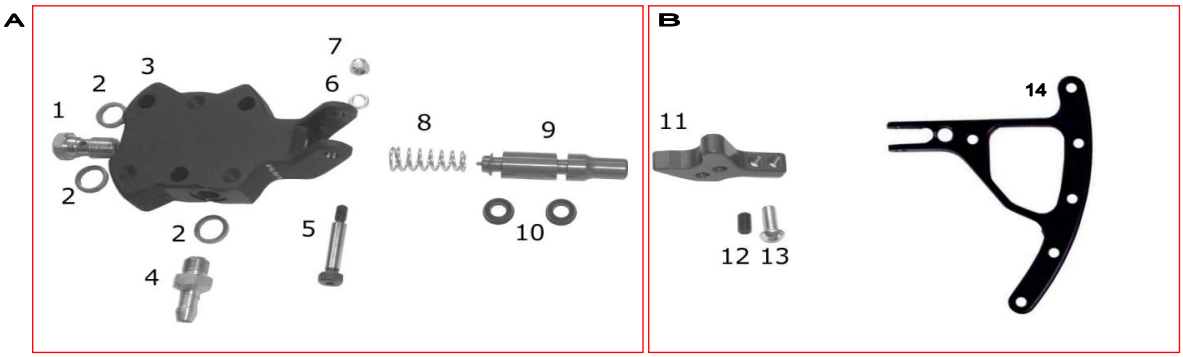

ES	COD	DESCRIZIONE	ITEMS
A	FM0.01909	Pompa Freni V06 FA Montata	Front Master Cyl.V06 ASSY
1	SZ0.00185	Raccordo M10 UP/V04/V05	Fitting M10 UP/V04/V05
2	AFN.00186	Rondella Rame 10,5-14x2	Copper Washer 10,5-14x2
3	SAN.01909	Corpo Pompa Freno FA NERO	Master Cylinder FBS Body BL
4	SBN.01919	Raccordo Serbatoio Pompa FA	Master Cylinder Tank Fitting
5	AFN.01916	Vite M 5x 25 Gambo Rett.M6	M 5x 25 Rectif.M6 Stem Screw
6	AFN.02264	Rondella 5,3- 9x1,5	Washer 5,3- 9x1,5
7	AFN.00360	Dado M 5 Autobloccante Basso	Nut M 5 Low Self-Locking
8	SZ0.01896	Molla Pompa Freni FA	Master Cylinder FBS Spring
9	SDN.01911	Pistoncino Pompa Freno FA	Master Cylinder FBS Piston
10	AFS.01912	Gommino Pompa Freno FA	FA Master Cylinder Rubber
B	FK0.01907	Leva Pompa Freno Ant.Comp..	Front Master Cyl. Lever Co
11	SAN.01910	Puntale Pompa Freni FA Nero	Fork with Point FBS Black
12	AFN.00357	Grano M6x10	Grain M6x10
13	AFN.00502	Vite M 6x 16 Bombata	M 6x 16 Convex Head Screw
14	SAN.01907	Leva Pompa Freno Ant.Nera	Front Master Cylinder Lever

PINZA ANTERIORE V04-V06FM0.03005D - FM0.0305S / FRONT BRAKE CALIPER V04-V06 FM0.0305D - FM0.0305S

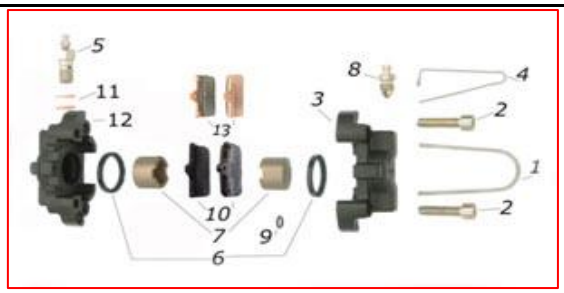

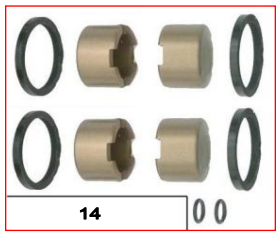

ES	COD	DESCRIZIONE	ITEMS
A	FM0.0305D	Pinza Ant.V04 / V06 DX Co	Front Brake Cal.V04/V06 RH Co
A	FM0.0305S	Pinza Ant.V04 / V06 SX Co	Front Brake Cal.V04/V06 LF Co
1	AFS.00181	Spina Blocca Pastiglia V06 "U"	Brake Pad Block Pin V06
2	AFN.00307	Vite M 8x 30 Esagonale	M 8x 30 Hexagonal Head Screw
3	SDN.0312D	Semi Pinza V04/V06 Ant.DX	Half F.CaliperV04/V06 Ear RH
3	SDN.0312S	Semi Pinza V04/V06 Ant.SX	Half F.CaliperV04/V06 Ear LF
4	AFS.00187	SpinaSicurezza UP/V04/V05 Ant	UP/V04/V05 >Safety Pin
5	FM0.00308	Raccordo Combinato Comp	Bleeder Fitting Complete
6	AFS.00179	Gommino Pinza UP/V04/V05 Ant.	UP/V04/V05 Fr. Piston Seal
7	SD1.00370	Pist.. PinzaUP/V04-05-08 A	UP/V04/V05/V08 Fr.Brake Piston
8	SZ0.00184	Spurgo M10 UP/V04/V05	Bleeder M10 UP/V04/V05
9	AFN.00182	OR Pinza UP/V04/V05	OR > Caliper UP/V04/V05
10	AFS.00306	Pastiglia Freno V04/V06 Ant.	Front Brake Pad V04/V06 STD
11	AFN.00186	Rondella Rame 10,5-14x2	Copper Washer 10,5-14x2
12	SDN.0310D	Semi Pinza V04/V06 Ant.DX	Half F.CaliperV04/V06 RH
12	SDN.0310S	Semi Pinza V04/V06 Ant.SX	Half F.CaliperV04/V06 LF
13	AFS.01048	Pastiglia Freno Ant.V04/V06 Sint.	Front Brake Pad Synterazed V04/V06
14	CRG.00311	Kit Revisione 2 PinzeA.V04/V06	Kit V04Fr/V06 xRevision(2cal.)

1-2-3-4

1-2-3-5

6

7

8

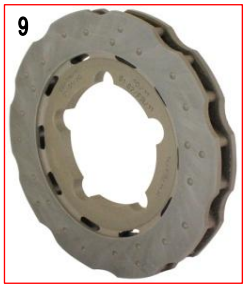
9

10

11

12

13
LEVEL MAX

14

16 17 18 19

20 21 22

24 25 26

27

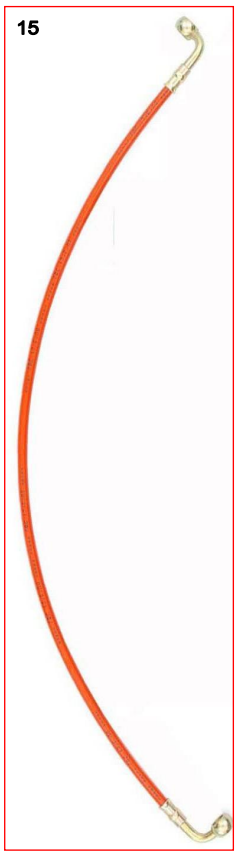
15

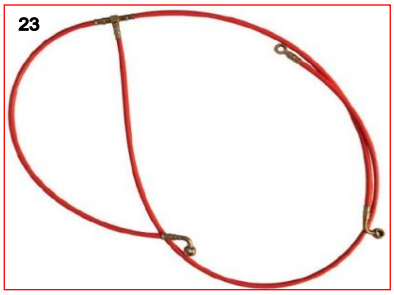
23

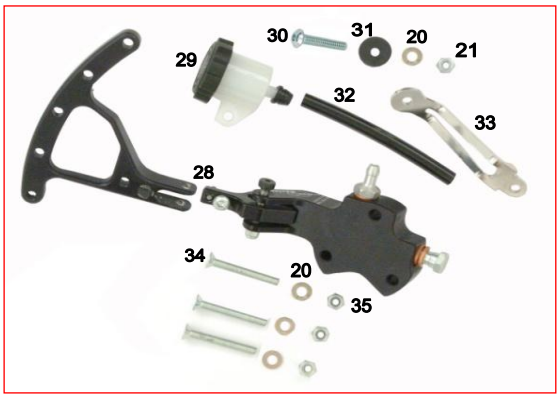
30
31
20
21
29
32
33
28
34
20
35

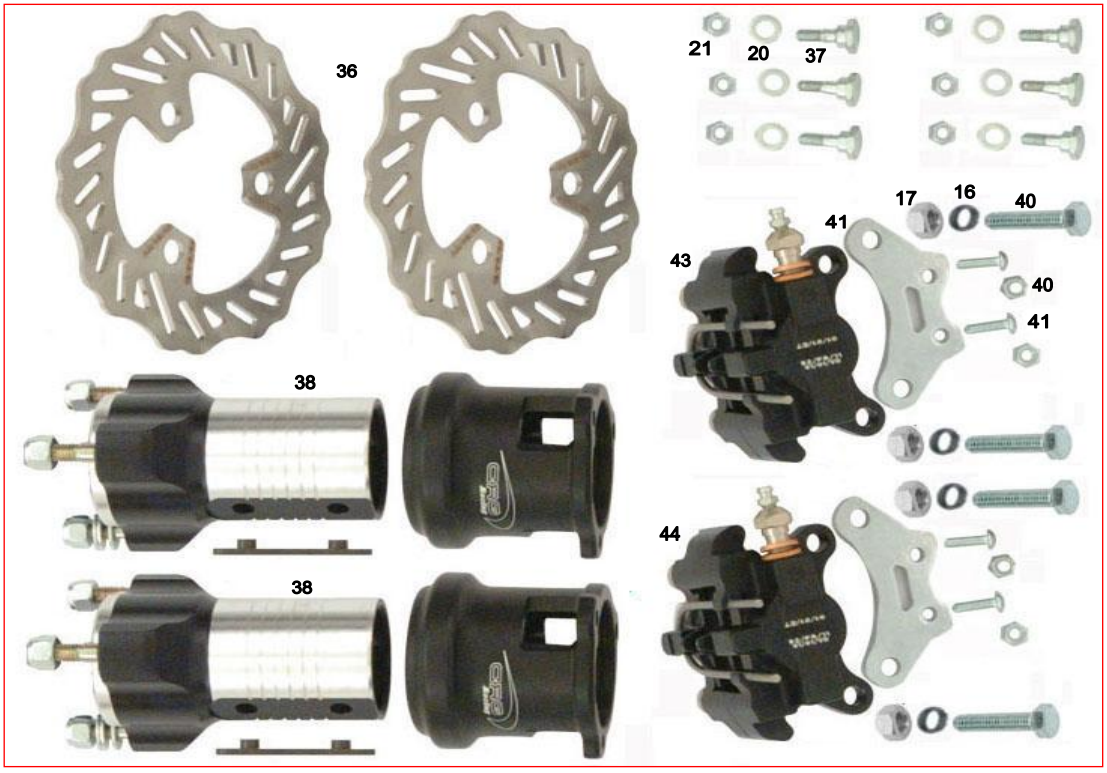
36
21
20
37
17
16
40
41
43
40
41
38
38
44

ES	COD	D E S C R I Z I O N E	I T E M S
	CRG.01863	Imp. V06 KF2 DUR Ant.+ Post.	Brake Sys.V06 KF2 Dur Rear + Front
	CRG.01907	Impianto V06 Anteriore Co.	Breake Sys.V06 Front Co.
1	AFS.00216	Forchetta Semplice STD	Simple Fork Standard
2	AFS.00224	Clift STD	Clift STD
3	AFN.00093	Dado M 6	Nut M 6
4	SBN.00918	Asta Freno cm.45 NERA	Draw Pin cm.45 Black
5	AFS.00809	Cavo Sicurezza Cm.44	Safety Cable Cm.45
6	FMN.00238	Mozzo Disco Post..All.50 V04/V05	Rear Brake Disc HubV04/V05 50
7	FC0.01641	Piastra Supp.Pinza V05 Post.	Rear Brake Caliper PlateV05
8	FC0.02869	Piastra Supp.Pinza V05 Post.2012	Rear Brake Caliper PlateV05 2012
9	AFS.01591	Disco Freno V05 Post.Duralcan	Rear Brake Disc V05 Duralcan
10	SAN.01592	Flangia Disco V05 Posteriore	Rear Brake Disc Flange V05
11	FM0.01678	Pinza Posteriore V05 Co.Dural.	Rear Brake Caliper V05 Co.Dur.
12	FK0.01660	Bussola Disco V05 Post. Comp.	Rear BrakeDiscV05 Bushing Comp
13	FM0.00192	Pompa Freni UP/V04/V05 CRG Co	Rear Master Cylinder V05 CRG Co
14	FAN.01462	Distanziale Pinza xIbrido	Caliper Spacer x Hybrid
15	AFS.00240	Tubo FrenoV05 Post Occ.mm720	Brake Tube V05 Rear Eye.mm 720
16	AFN.00047	Rondella Ondulata 8	Undulated Washer 8
17	AFN.00286	Dado M 8 Metalblock	Nut M 8 Metalblock
18	AFN.00277	Rondella 8,5-14x2	Washer 8,5-14x2
19	AFN.00307	Vite M 8x 30 Esagonale	M 8x 30 Hexagonal Head Screw
20	AFN.00105	Rondella 6,5-12x1,5	Washer 6,5-12x1,5
21	AFN.00234	DadoM 6 Metalblock	Nut M 6 Metalblock
22	AFN.00183	Vite M 6x 20 Cilindrica	M 6x 20 Socket Head Screw
23	AFS.00862	Tubo Freno Tris Occh.V06 Ant.	BrakeTube Tris Eye.V06 Front
24	AFN.00359	Vite M 5x 12 Bombata	M 5x 12 Convex Head Screw
25	AFN.00361	Rondella 5,5-15x1,5	Washer 5,5-15x1,5
26	AFN.00360	Dado M 5 Autobloccante Basso	Nut M 5 Low Self-Locking
27	AFN.00337	Fascetta Ferma Tubo Freno	Brake Tube Band
28	FK0.01909	Pompa Freno V06 FA C/Leva	Master Cyl. V06 FBS W/Lever
29	AFS.01799	Serb. Pompa Radiale Brembo	Radial Tank Pump Brembo
30	AFN.02144	Vite M 6x 20 Bombata	M 6x 20 Convex Head Screw
31	AFS.00258	Gommino Pianale	Floor Tray Rubber
32	SL1.00139	Tubo Serb. Pompa Radiale Fa	Tube xMaster Cyl.Tank FBS
33	AML.01906	Supporto Serbatoio FA	FBS Recovery Tank Support
34	AFN.00294	Vite M 6x 45 Cilindrica	M 6 x 45 Socket HeadScrew
35	AFN.00106	Dado M 6 Autobloccante Basso	Nut M 6 LOW Self-locking
36	AML.01859	Disco Freno V06 FA	Front Brake System V06 Disc
37	SBN.01866	Bussola Disco FA/V06	V06 Brake Disc Bushing
38	FMN.01865	Mozzo Ruota Ant. All. V06 D25	Front Wheel Hub All V06 25 Co
39	SAN.01867	Mozzo Disco Ant. All. V06	All Front Brake Disc Hub V06
40	AFN.00316	Vite M 8x 22 Esagonale	M 8 x 22 Hex. Head Screw
41	FC0.01860	Piast. Supp.Pinza V06 FA Crom	Brake Caliper Plate V06 Chrom.
42	AFN.00016	Vite M 6x 14 Bombata	M 6x 14 Convex Head Screw
43	FM0.0305D	Pinza Ant.V04 / V06 DX Co	Front Brake Cal.V04/V06 RH Co
44	FM0.0305S	Pinza Ant.V04 / V06 SX Co	Front Brake Cal.V04/V06 LF Co
45	AFS.00246	Chiavetta Assale 2 pioli NR	Rear Axle Key Black 2 pivot

POMPA FRENI / FM0.01909 / MASTER CYLINDER

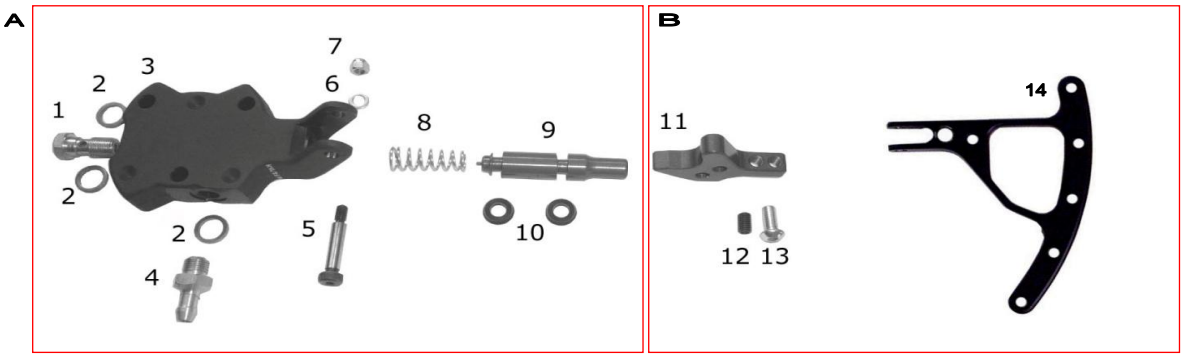

ES	COD	DESCRIZIONE	ITEMS
A	FM0.01909	Pompa Freni V06 FA Montata	Front Master Cyl.V06 ASSY
1	SZ0.00185	Raccordo M10 UP/V04/V05	Fitting M10 UP/V04/V05
2	AFN.00186	Rondella Rame 10,5-14x2	Copper Washer 10,5-14x2
3	SAN.01909	Corpo Pompa Freno FA NERO	Master Cylinder FBS Body BL
4	SBN.01919	Raccordo Serbatoio Pompa FA	Master Cylinder Tank Fitting
5	AFN.01916	Vite M 5x 25 Gambo Rett.M6	M 5x 25 Rectif.M6 Stem Screw
6	AFN.02264	Rondella 5,3- 9x1,5	Washer 5,3- 9x1,5
7	AFN.00360	Dado M 5 Autobloccante Basso	Nut M 5 Low Self-Locking
8	SZ0.01896	Molla Pompa Freni FA	Master Cylinder FBS Spring
9	SDN.01911	Pistoncino Pompa Freno FA	Master Cylinder FBS Piston
10	AFS.01912	Gommino Pompa Freno FA	FA Master Cylinder Rubber
B	FK0.01907	Leva Pompa Freno Ant.Comp..	Front Master Cyl. Lever Co
11	SAN.01910	Puntale Pompa Freni FA Nero	Fork with Point FBS Black
12	AFN.00357	Grano M6x10	Grain M6x10
13	AFN.00502	Vite M 6x 16 Bombata	M 6x 16 Convex Head Screw
14	SAN.01907	Leva Pompa Freno Ant.Nera	Front Master Cylinder Lever

PINZA ANTERIORE V04-V06FM0.03005D - FM0.0305S / FRONT BRAKE CALIPER V04-V06 FM0.0305D - FM0.0305S

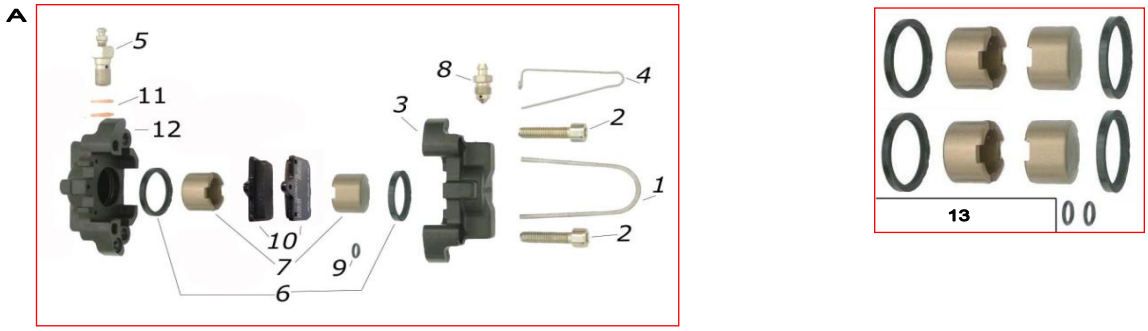

ES	COD	DESCRIZIONE	ITEMS
A	FM0.0305D	Pinza Ant.V04 / V06 DX Co	Front Brake Cal.V04/V06 RH Co
A	FM0.0305S	Pinza Ant.V04 / V06 SX Co	Front Brake Cal.V04/V06 LF Co
1	AFS.00181	Spina Blocca Pastiglia V06 "U"	Brake Pad Block Pin V06
2	AFN.00307	Vite M 8x 30 Esagonale	M 8x 30 Hexagonal Head Screw
3	SDN.0312D	Semi Pinza V04/V06 Ant.DX	Half F.CaliperV04/V06 Ear RH
3	SDN.0312S	Semi Pinza V04/V06 Ant.SX	Half F.CaliperV04/V06 Ear LF
4	AFS.00187	SpinaSicurezza UP/V04/V05 Ant	UP/V04/V05 >Safety Pin
5	FM0.00308	Raccordo Combinato Comp	Bleeder Fitting Complete
6	AFS.00179	Gommino Pinza UP/V04/V05 Ant.	UP/V04/V05 Fr. Piston Seal
7	SD1.00370	Pist.. PinzaUP/V04-05-08 A	UP/V04/V05/V08 Fr.Brake Piston
8	SZ0.00184	Spurgo M10 UP/V04/V05	Bleeder M10 UP/V04/V05
9	AFN.00182	OR Pinza UP/V04/V05	OR > Caliper UP/V04/V05
10	AFS.00306	Pastiglia Freno V04/V06 Ant.	Front Brake Pad V04/V06 STD
11	AFN.00186	Rondella Rame 10,5-14x2	Copper Washer 10,5-14x2
12	SDN.0310D	Semi Pinza V04/V06 Ant.DX	Half F.CaliperV04/V06 RH
12	SDN.0310S	Semi Pinza V04/V06 Ant.SX	Half F.CaliperV04/V06 LF
13	CRG.00311	Kit Revisione 2 PinzeA.V04/V06	Kit V04Fr/V06 xRevision(2cal.)

ES	COD	DESCRIZIONE	ITEMS
	CRG.02011	Impianto V08 100/D50 Co	V08 100/D50 Brake System Compl.
1	AFS.00216	Forchetta Semplice STD	Simple Fork Standard
2	AFS.00224	Clift STD	Clift STD
3	AFN.00093	Dado M 6	Nut M 6
4	SBN.00918	Asta Freno cm.45 Nera	Draw Pin cm.45 Black
5	AFS.00809	Cavo Sicurezza Cm.44	Safety Cable Cm.45
6	FMN.00832	Mozzo Disco Post.All.50 V08/V99	Rear Brake Disc Hub 50 V08/V99
7	FC0.02008	Piastra Supp.Pinza V08 Post.3F	Brake Caliper Supp.V08 Rear 3H
8	SL1.02011	Disco Freno V08 Posteriore	Rear Brake Disc V08
9	AFN.00295	Vite M 6x 25 Svasata	M 6x 25 Countersunk Head Screw
10	FM0.02004	Pinza Freno PosterioreV08	REAR Brake Caliper V08
11	AFN.02476	Vite M 8x130 Cilindrica	M 8x130 Socket Head Screw
12	FM0.00421	Pompa Freni V08/V99 Completa	Master Cylinder V08/V99 Completa
13	FAN.01462	Distanziale Pinza xIbrido	Caliper Spacer x Hybrid
A	FM0.00435	Tubo Freno Tris Post. V08/V99	Rear Brake Tube Tris V08/V99
14	AFN.00047	Rondella Ondulata 8	Undulated Washer 8
15	AFN.00286	Dado M 8 Metalblock	Nut M 8 Metalblock
16	AFN.00277	Rondella 8,5-14x2	Washer 8,5-14x2
17	AFN.00234	Dado M 6 Metalblock	Nut M 6 Metalblock
18	AFN.00105	Rondella 6,5-12x1,5	Washer 6,5-12x1,5

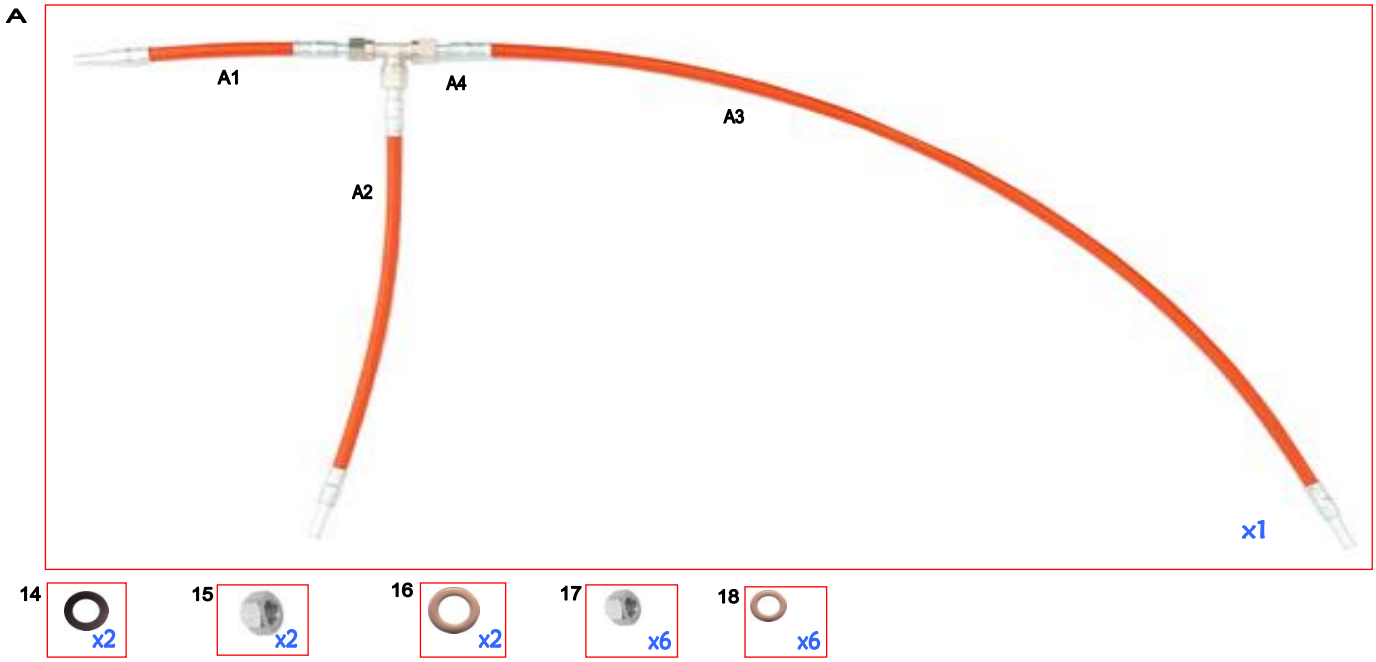

ES	COD	DESCRIZIONE	ITEMS
A1	AFS.00428	Tubo Freno mm 135	Brake Tube 135mm
A2	AFS.00429	Tubo Freno mm 250	Brake Tube 250mm
A3	AFS.00430	Tubo Freno mm 540	Brake Tube 540mm
A4	AFN.00431	Raccordo T Tubo Freno	Brake Tube Fitting T
A	FM0.00435	Tubo Freno Tris Post.V08/V99	Rear Brake Tube Tris V08/V99

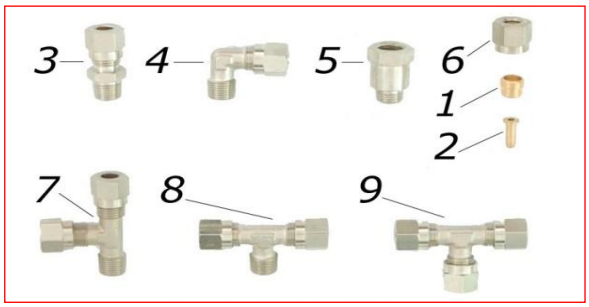

ES	COD	DESCRIZIONE	ITEMS
1	AFN.01042	Ogiva Esterna Tubo Freno	External Ogive>Brake Tube
2	AFN.01041	Ogiva Interna Tubo Freno	Internal Ogive>Brake Tube
3	AFN.00425	Raccordo Dritto Completo	Pipe-Fitting>Straight Comp.
4	AFN.00409	Raccordo L Per Pinza	Brake Caliper Fitting L
5	AFN.00484	DadoProlunga Raccordo	Nut for Fitting
6	AFN.01363	Dado Raccordo	Nut >>> Fitting
7	AFN.00486	Raccordo T Per Pompa	Master Cylinder Fitting T
8	AFN.01367	Raccordo T Per Pinza	Fitting T Brake Caliper
9	AFN.00431	raccordo T Tubo Freno	Brake Tube Fitting T

A

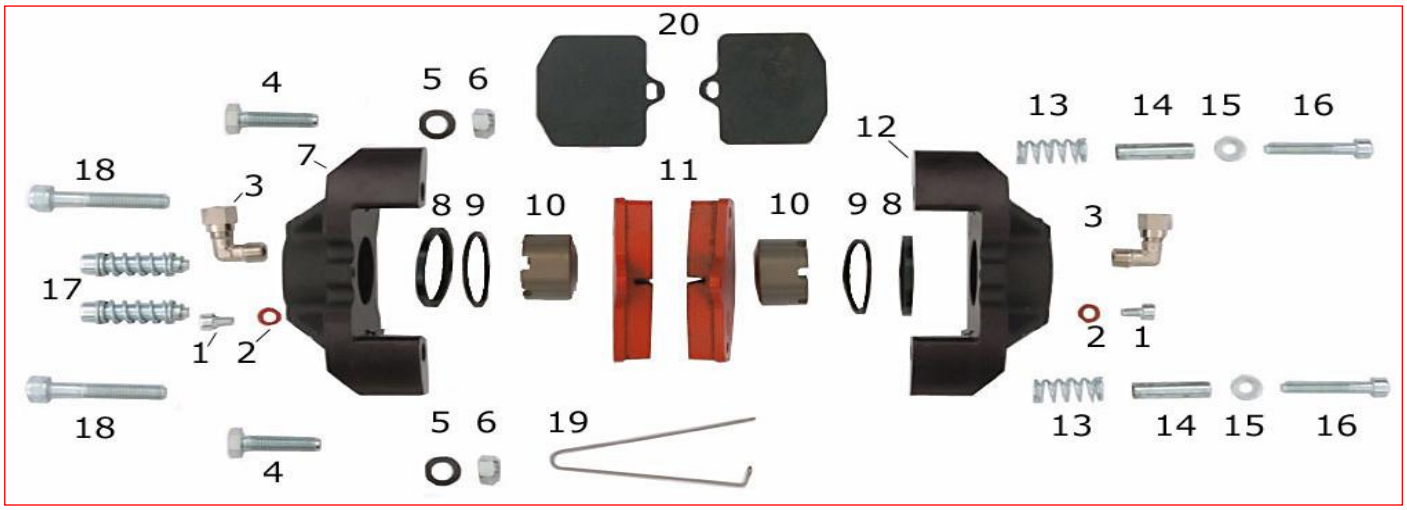

13

ES	COD	DESCRIZIONE	ITEMS
A	FM0.02004	Pinza Freno Posteriore V08	Rear Brake Caliper V08
1	AFN.00403	Vite M 5x 8 Cilidrica	M 5 x 8 Socket Head Screw
2	AFN.00402	Rondella Rame 5-10x1,5	Copper Washer 5-10x1,5
3	AFN.00409	Raccordo L Per Pinza	Brake Caliper Fitting L
4	AFN.00307	Vite M 8x 30 Esagonale	M 8x 30 Hexagonal Head Screw
5	AFN.00047	Rondella Ondulata 8	Undulated Washer 8
6	AFN.00286	Dado M 8 Metalblock	Nut M 8 Metalblock
7	SAN.2004S	Semi Pinza V08 Pos.SX C/OR.Nera	Half R.CaliperV08 RH W/Ear Black.
8	AFS.01051	Gommino V05/V08 Pinza Post.	V05/V08 REAR Brake CaliperSeal
9	AFS.01681	Gommino V05/V08 Parapolvere	V05/V08 Dust Guard Seal
10	SD1.02006	Pistoncino Pinza V08 Post.	V08 Rear Brake Piston
11	AFS.02000	Pastiglia Freno V08 Post.	V08 Rear Brake Pad
12	SAN.2004D	Semi Pinza V08 Pos.DX No OR.Nr.	Half R.CaliperV08 RH NoEar Black
13	SBN.02014	Molla pastiglia Posteriore V08	Brake Pad Spring V08 Rear
14	SBN.00413	Distanziale Past.Pos.V08-V99	RearBrake Pad SpacerV08-V99
15	AFN.00105	Rondella 6,5-12x1,5	Washer 6,5-12x1,5
16	AFN.00137	Vite M 6x 35 Cilindrica	M 6 x 35 Socket Head Screw
17	FM0.02014	Vite Molla Pastiglia Post.V08	Rear BrakePad Spring V08 CO
18	AFN.00159	Vite M 8x 45 Cilindrica	M 8 x 45 Socket Head Screw
19	AFS.01682	Spina Sicurezza V05/V08 Post.	V05/V08 Rear Safety Pin
20	SBN.01931	Spessore Pastiglia V08 Post.	Brake Pad Spacer V08 Rear
21	CRG.02004	Kit Revisione Pinza Post.V08	Kit V08 RearBrake Caliper Rev.

A

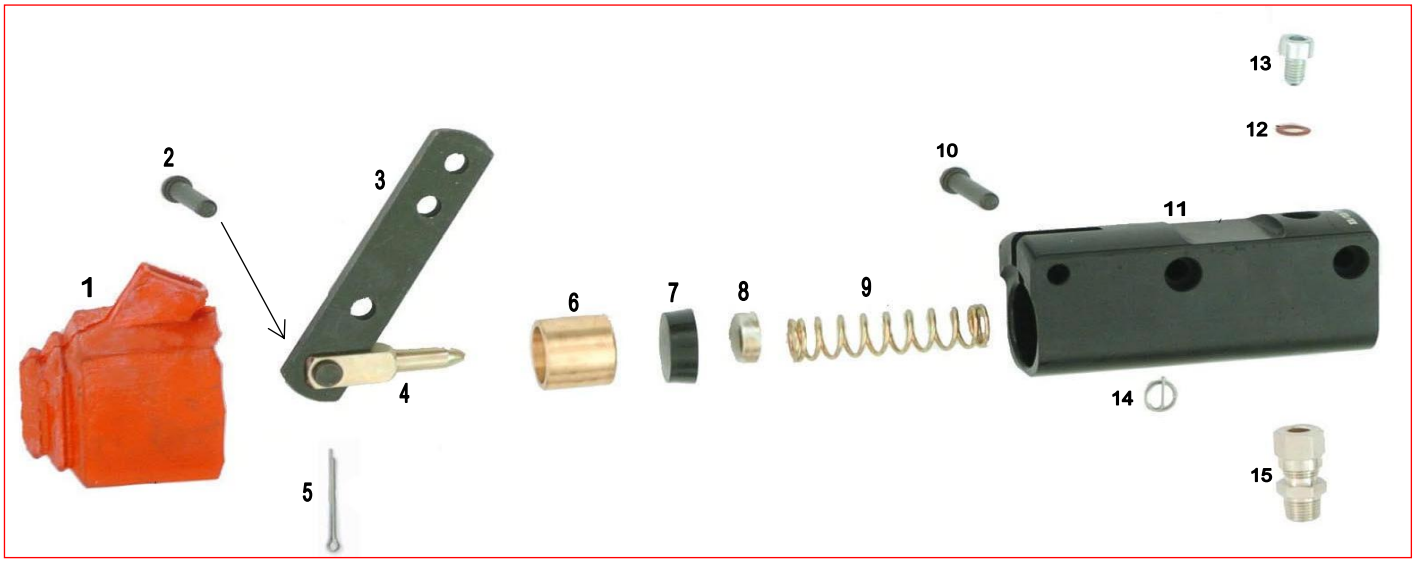

ES	COD	DESCRIZIONE	ITEMS
A	FM0.00421	Pompa Freni V08/V99 Comp	Master Cylinder V08/V99 Comp.
1	AFS.00199	Copripolevere Pompa Freni	Master Cylinder>Dust Cover
2	SBN.00200	Spina Pompa Freni 16 mm	Master Cylinder Pin 16mm
3	SBN.00197	Leva Pompa Freni Nera	Master Cylinder LeverBlack
4	AFS.00196	Puntale Pompa Freni	Fork with Point
5	AFN.00201	Copiglia	Master Cylinder Split Pin
6	SL1.00426	Pistoncino Pompa V99/V08	Master Cyl.Piston V99/V08
7	AFS.00406	Gommino Pinza/Pompa V99 D22	Piston Seal D22 V99/V08
8	AFS.00423	Tappo Molla Pompa V99/V08	Master Cyl.Spring Cap V99/V08
9	SZ0.00422	Molla Pompa Freni V99/V08	Master Cyl.Spring V99/V08
10	SBN.00202	Spina PompaFreni 35,5mm	Master Cylinder Pin 35,5mm
11	SAN.00421	Corpo Pompa Freno V99	Master Cylinder V99 Body
12	AFN.01368	Rondella Fibra 6-10x2	Fiber Washer 6-10x2
13	AFN.00860	Vite M 6x 10 TCI	M 6 x 10 TCI Head Screw
14	AFS.00981	Spina Elastica D 8	Elastic Pin D 8
15	AFN.00425	Raccordo Diritto Completo	Pipe-Fitting>Straight Comp
16	CRG.00421	Kit Rev. 1 PompaFreni V08-V99	Master Cyl.OverhaulKit 1 V08-V99

6

7

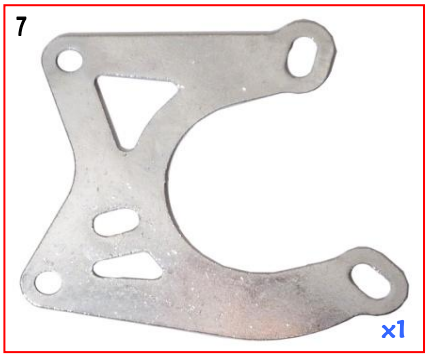

8

9

11

10

12

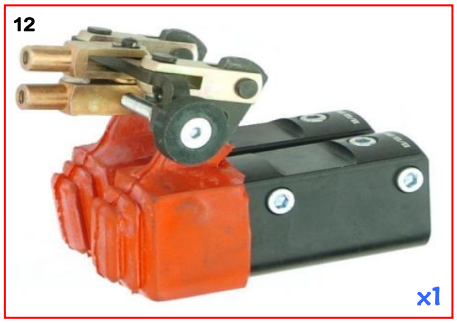

13

15

16

17

18

19

14

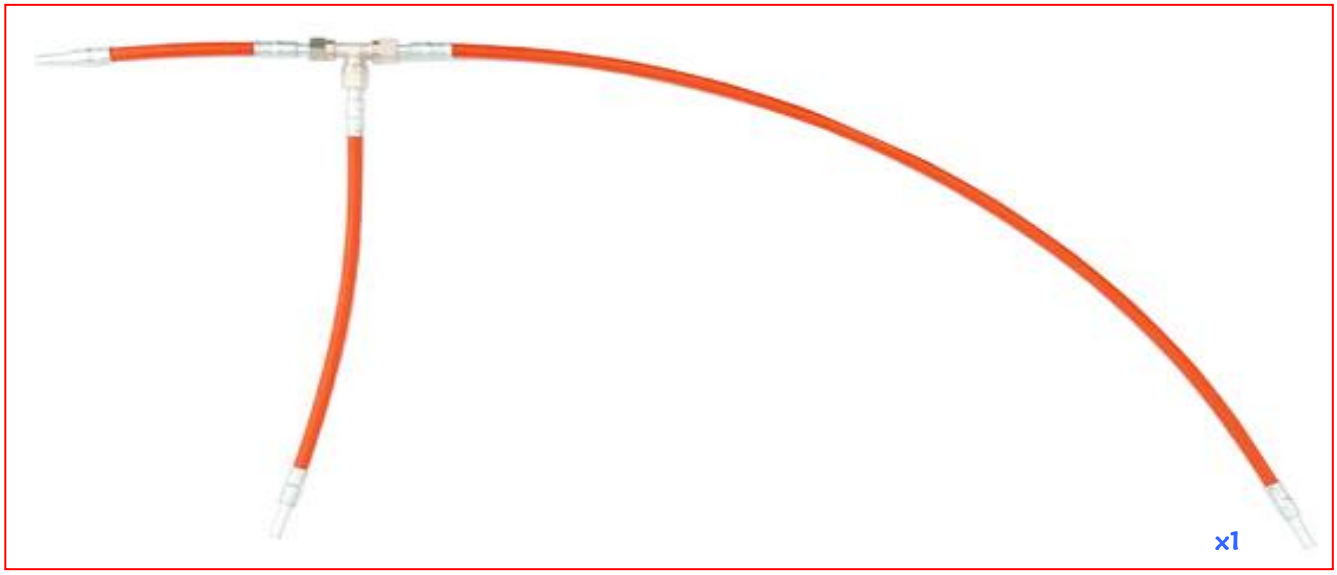

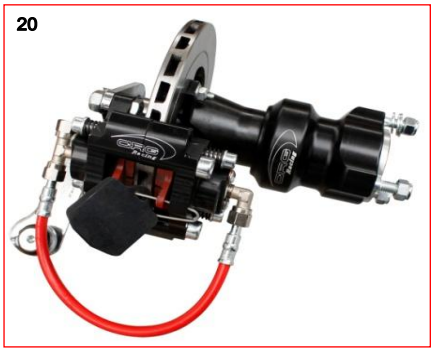

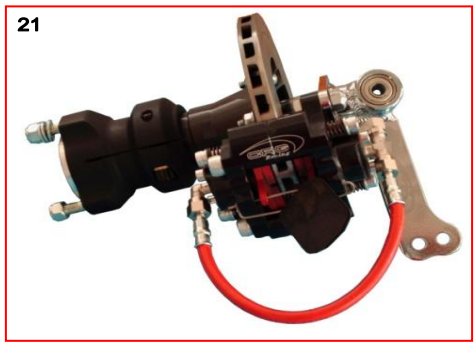

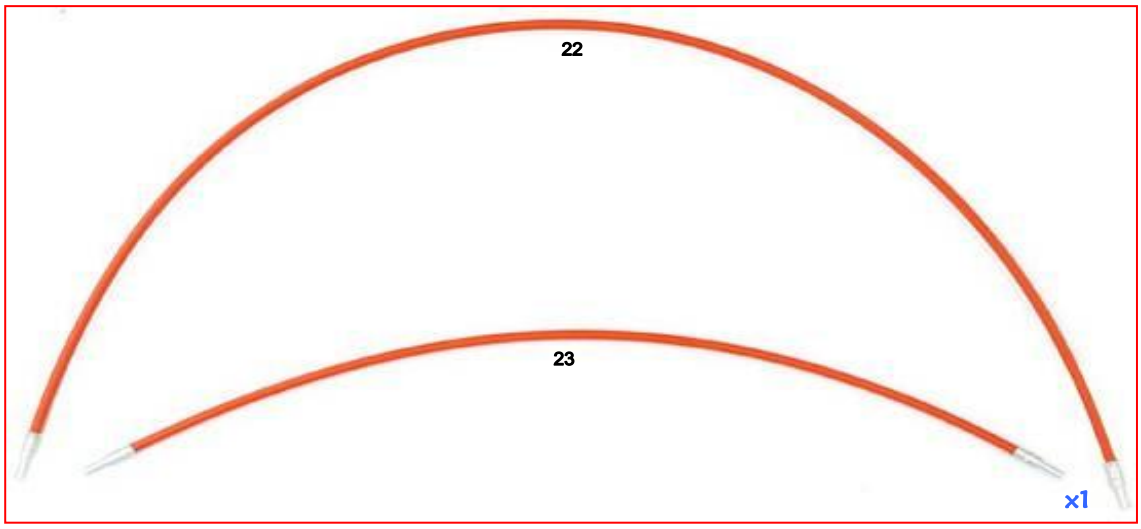

ES	COD	DESCRIZIONE	ITEMS
A	CRG.02003	Impianto V08 125/D50 CO	V08 125/D50 Brake System Comp.
1	AFS.00216	Forchetta Semplice STD	Simple Fork Standard
2	AFS.00224	Clift STD	Clift STD
3	AFN.00093	Dado M 6	Nut M 6
4	SBN.00223	Asta Freno cm.42 Nera	Draw Pin cm.42 Black
5	AFS.00227	Cavo Sicurezza Cm.41,5	Safety Cable Cm.41,5
6	FMN.00832	Mozzo Disco Post.All.50 V08/V99	All.Rear Brake Disc Hub 50 V08/V99
7	FC0.02008	Piastra Supp.Pinza V08 Post.3F	Brake Caliper Supp.V08 Rear 3H
8	SL1.02011	Disco Freno V08 Posteriore	Rear Brake Disc V08
9	AFN.00295	ViteM 6x 25 Svasata	M 6x 25 Countersunk Head Screw
11	AFN.02476	Vite M 8x130 Cilindrica	M 8x130 Socket Head Screw
12	FM0.00485	Doppia Pompa V08-V99+Ripar.125	2 MasterCyl.V08-V99 w/equa.125
13	FAN.01462	Distanziale Pinza xIbrido	Caliper Spacer x Hybrid
14	FM0.00435	Tubo Freno Tris Post.V08/V99	Rear Brake Tube Tris V08/V99
15	AFN.00047	Rondella Ondulata 8	Undulated Washer 8
16	AFN.00286	Dado M 8 Metalblock	Nut M 8 Metalblock
17	AFN.00277	Rondella 8,5-14x2	Washer 8,5-14x2
18	AFN.00234	Dado M 6 Metalblock	Nut M 6 Metalblock
19	AFN.00105	Rondella 6,5-12x1,5	Washer 6,5-12x1,5
20	FM0.2004D	Gruppo Ant.V08 CRG 8-17 DX	Front Group V08 CRG 8-17 RH
21	FM0.2004S	Gruppo Ant.V08 CRG 8-17 SX	Front Group V08 CRG 8-17 LF
22	AFS.00487	Tubo Freno V08 Ant.Cod.mm1080	BRAKE Tube V08 Fr.Tang mm1080
23	AFS.00488	Tubo Freno V08 Ant.Cod.mm 670	BRAKE Tube V08 Fr.Tang mm 670

A

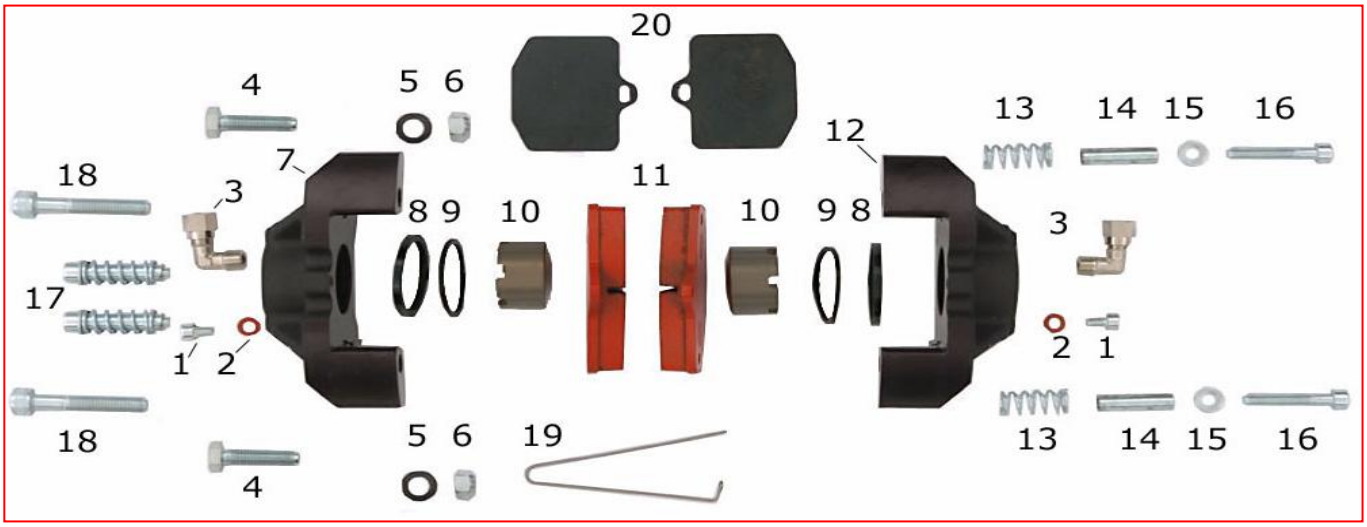

B

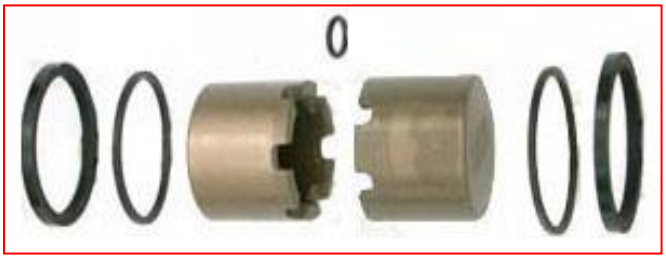

ES	COD	DESCRIZIONE	ITEMS
A	FM0.02004	Pinza Freno Posteriore V08	Rear Brake Caliper V08
1	AFN.00403	Vite M 5x 8 Cilindrica	M 5 x 8 Socket Head Screw
2	AFN.00402	Rondella Rame 5-10x1,5	Copper Washer 5-10x1,5
3	AFN.00409	Raccordo L Per Pinza	Brake Caliper Fitting L
4	AFN.00307	Vite M 8x 30 Esagonale	M 8x 30 Hexagonal Head Screw
5	AFN.00047	Rondella Ondulata 8	Undulated Washer 8
6	AFN.00286	Dado M 8 Metalblock	Nut M 8 Metalblock
7	SAN.2004S	Semi Pinza V08 Pos.SX C/OR.NR	Half R.CaliperV08 RH W/Ear BL.
8	AFS.01051	Gommino V05/V08 Pinza Post.	V05/V08 Rear Brake CaliperSeal
9	AFS.01681	Gommino V05/V08 Parapolvere	V05/V08 Dust Guard Seal
10	SD1.02006	Pistoncino Pinza V08 Post.	V08 Rear Brake Piston
11	AFS.02000	Pastiglia Freno V08 Post.	V08 Rear Brake Pad
12	SAN.2004D	Semi Pinza V08 Pos.DX No Or.Nr	Half R.CaliperV08 RH NoEar BL.
13	SBN.02014	Molla Pastiglia Post. V08 Nera	Brake Pad Spring V08 Rear
14	SBN.00413	Distanziale Past.Pos.V08-V99	Rear Brake Pad SpacerV08-V99
15	AFN.00105	Rondella 6,5-12x1,5	Washer 6,5-12x1,5
16	AFN.00137	Vite M 6x 35 Cilindrica	M 6 x 35 Socket Head Screw
17	FM0.02014	Vite Molla Pastiglia Post.V08	Rear BrakePad Spring V08 Co
18	AFN.00159	Vite M 8x 45 Cilindrica	M 8 x 45 Socket Head Screw
19	AFS.01682	Spina Sicurezza V05/V08 Post.	V05/V08 Rear Safety Pin
20	SBN.01931	Spessore Pastiglia V08 Post.	Brake Pad Spacer V08 Rear
B	CRG.02004	Kit Revisione Pinza Post.V08	Kit V08 RearBrake Caliper Rev.

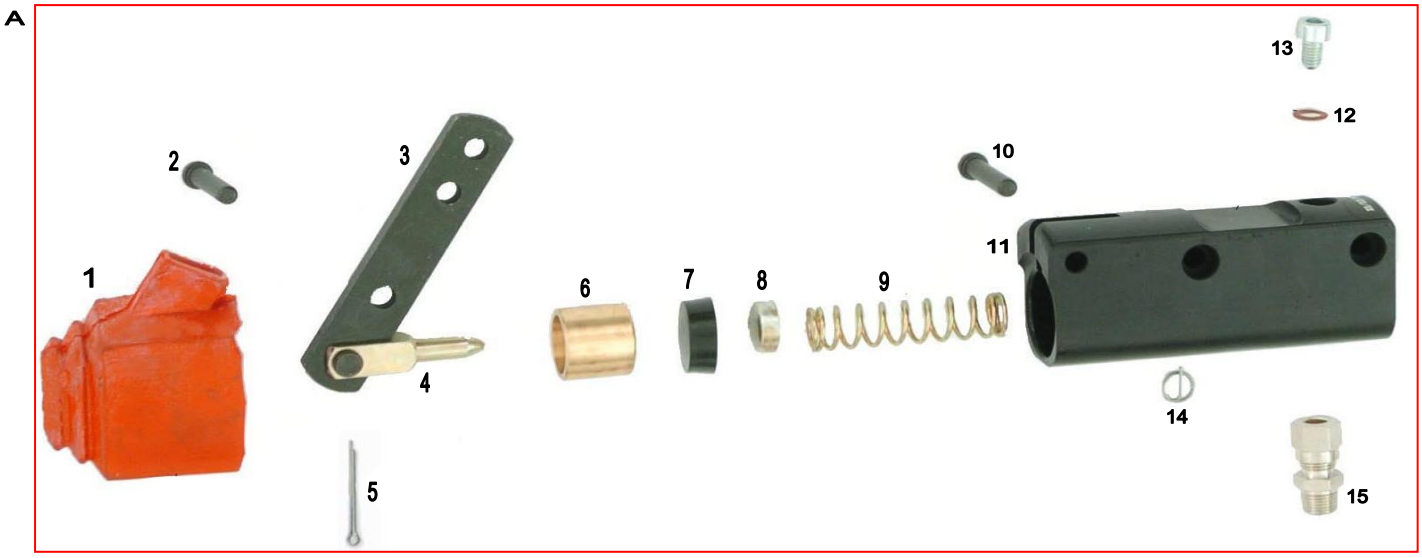

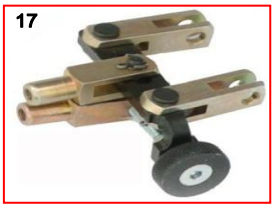

ES	COD	DESCRIZIONE	ITEMS
A	FM0.00485	Doppia Pompa V08-V99+Ripar.125	2 MasterCyl.V08-V99 w/equa.125
B	FM0.00421	Pompa Freni V08/V99 Comp	MASTER Cylinder V08/V99 Comp.
1	AFS.00199	Copripolvere Pompa Freni	MASTER Cylinder>Dust Cover
2	SBN.00200	Spina Pompa Freni 16 mm Nera	MASTER Cylinder Pin 16mm BLACK
3	SBN.00197	Leva Pompa Freni NERA	Master Cylinder LEVER Black
4	AFS.00196	Punatale Pompa Freni	Fork with Point
5	AFN.00201	Copiglia	Master Cylinder Split Pin
6	SL1.00426	Pistoncino Pompa V99/V08	Master Cyl.Piston V99/V08
7	AFS.00406	Gommino Pinza/Pompa V99 D22	Piston Seal D22 V99/V08
8	AFS.00423	Tappo Molla Pompa V99/V08	Master Cyl.Spring Cap V99/V08
9	SZ0.00422	Molla Pompa Freni V99/V08	Master Cyl.Spring V99/V08
10	SBN.00202	Spina PompaFreni 35,5mm Nera	Master Cylinder Pin 35,5mm Bl.
11	SAN.00421	Corpo Pompa Freno V99 Nero	Master Cylinder V99 Body Bl.
12	AFN.01368	Rondella Fibra 6-10x2	Fiber Washer 6-10x2
13	AFN.00860	ViteM 6x 10 TCI	M 6 x 10 TCI Head Screw
14	AFS.00981	Spina Elastica D 8	Elastic Pin D 8
15	AFN.00425	Raccordo Diritto Completo	Pipe-Fitting>Straight Comp
16	AFN.00486	Raccordo T Per Pompa	Master Cylinder Fitting T
17	FM0.00330	Ripartitore Frenata125cc	Brake Equalizer 125 complete
18	SBN.00214	Spina Ripartitore 17,5mm Nera	Divider Pin 17,5mm Black
19	AFN.00786	Vite M 6x 80 Cilindrica	M 6x 80 Socket Head Screw
20	SBN.00220	Spessore 6,5-15x 3 Pompa	Master Cyl.Spacer 6,5-15x 3
21	AFN.00105	Rondella 6,5-12x1,5	Washer 6,5-12x1,5
22	AFN.00264	Dado M 6 Autobloccante Alto	Nut M 6 High Self-Locking
C	CRG.00421	Kit Rev. 1 Pompa Freni V08-V99	Master Cyl.Overhaul Kit 1 V08-V99

A

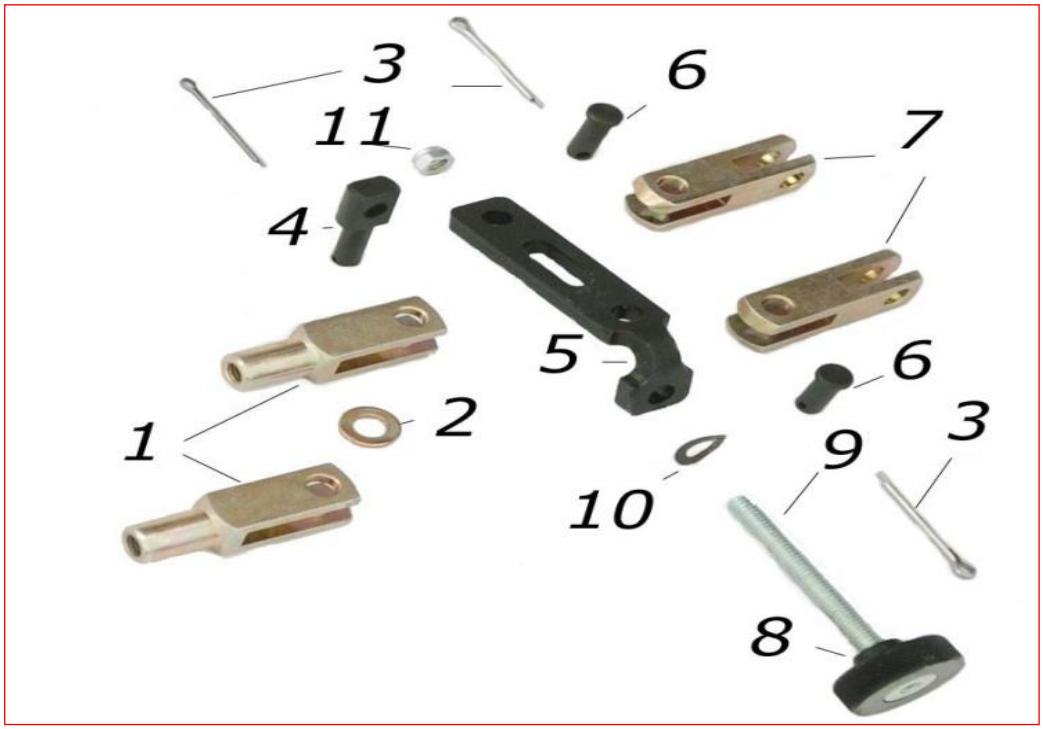

ES	COD	DESCRIZIONE	ITEMS
D	FM0.00330	Ripartitore Frenata 125cc	Brake Equalizer 125 complete
1	AFS.00216	Forchetta Semplice STD	Simple Fork Standard
2	AFN.00105	Rondella 6,5-12x1,5	Washer 6,5-12x1,5
3	AFN.00201	Copiglia	Master Cylinder Split Pin
4	SBN.00335	Perno Registro Rip.125 Nero	Master Cyl.Div.125 Reg.Pivot
5	SBN.00334	Piastrina Ripartitore125 Nera	Master Cyl.Divider 125 Plate
6	SBN.00214	Spina Ripartitore 17,5mm Nera	Divider Pin 17,5mm Black
7	AFS.00215	Forchetta Doppia	Double Fork
8	SAN.00333	Pomolo Registro Ripartit. Nero	Divider Register Pommel Black
9	AFN.02322	Vite M 6x 70 Svasata	M 6 x 70 Countersunk HeadScrew
10	AFN.00331	Rondella Ondulata 6	Undulated Washer 6
11	AFN.00106	Dado M 6 Autobloccante Basso	Nut M 6 Low Self-locking

RACCORDI / V08 / FITTINGS

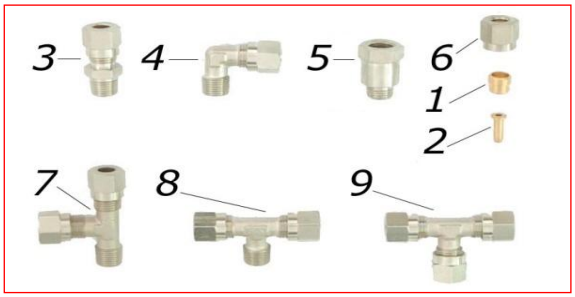

ES	COD	DESCRIZIONE	ITEMS
1	AFN.01042	Ogiva Esterna Tubo Freno	External Ogive>Brake Tube
2	AFN.01041	Ogiva Interna Tubo Freno	Internal Ogive>Brake Tube
3	AFN.00425	Raccordo Diritto Completo	Pipe-Fitting>Straight Comp.
4	AFN.00409	Raccordo L Per Pinza	Brake Caliper Fitting L
5	AFN.00484	Dado Prolunga Raccordo	Nut for Fitting
6	AFN.01363	Dado Raccordo	Nut >>> Fitting
7	AFN.00486	Raccordo T Per Pompa	Mster Cylinder Fitting T
8	AFN.01367	Raccordo T Per Pinza	Fitting T Brake Caliper
9	AFN.00431	Raccordo T Per Tubo Freno	BrakeTube Fitting T

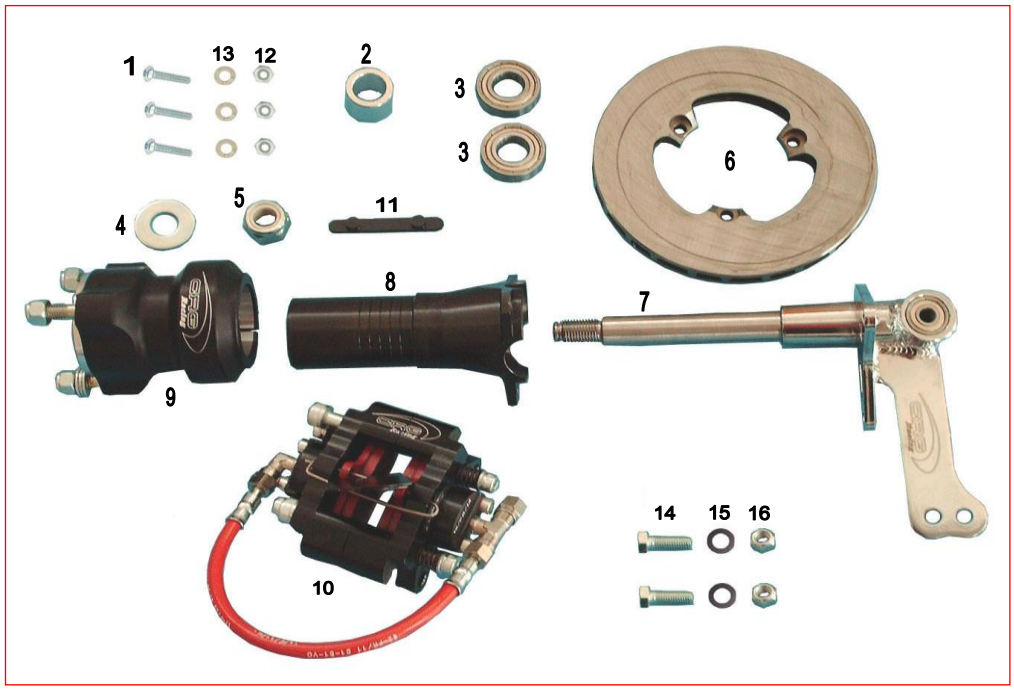

ES	COD	DESCRIZIONE	ITEMS
	FM0.2004D	Gruppo Ant.V08 CRG 8-17 DX	Front Group V08 CRG 8-17 RH
1	AFN.02258	Vite M 6x 22 Bombata	M 6x 22 Convex Head Screw
2	SL1.02232	Distanziale Perno Fus.8-17 V08	Stub Axle V08 8-17 Spacer
3	AFN.00008	Cuscinetto 6003 MozzoAnt.	Bearing 6003 Front Hub
4	AFN.01564	Rondella 15 -29,5x2,5	Washer 15 -29,5x2,5
5	AFN.00058	Dado M14x1,5 Autobloccante	Nut M14 x 1,5 Self-locking
6	SL1.2012D	Disco Freno V08 Anteriore DX	Front Brake Disc V08 Right
7	FM0.2008D	Fusello V08 CRG 8-17 DX Co.	Stub Axle V08 CRG 8-17 RH Co.
8	AFS.02018	Mozzo Disco Ant.Fr V08 17-17 Nero	Front BrakeDisc Hub V08 D17-17
9	FMN.00321	Mozzo Ant.125 Ruota Nero Co	Front Wheel Hub 125 Black Co
10	FM0.2005D	Pinza Anteriore V08 DX Co	Front Brake Caliper V08 RH Co
11	AFS.00246	Chiavetta Assale 2 pioli Nr	Rear Axle Key Black 2 pivot
12	AFN.00286	Dado M 8 Metalblock	Nut M 8 Metalblock
13	AFN.00047	Rondella Ondulata 8	Undulated Washer 8
14	AFN.00107	Vite M 8x 25 Esagonale	M 8 x 25 Socket Head Screw
15	AFN.00105	Rondella 6,5-12x1,5	Washer 6,5-12x1,5
16	AFN.00234	Dado M 6 Metalblock	Nut M 6 Metalblock
	FM0.2004S	Gruppo Ant.V08 CRG 8-17 SX	Front Group V08 CRG 8-17 LF
1	AFN.02258	Vite M 6x 22 Bombata	M 6x 22 Convex Head Screw
2	SL1.02232	Distanziale Perno Fus.8-17 V08	Stub Axle V08 8-17 Spacer
3	AFN.00008	Cuscinetto 6003 Mozzo Ant.	Bearing 6003 Front HUB
4	AFN.01564	Rondella 15 -29,5x2,5	Washer 15 -29,5x2,5
5	AFN.00058	Dado M14x1,5 Autobloccante	Nut M14 x 1,5 Self-locking
6	SL1.2012S	Disco Freno V08 Anteriore SX	Front Brake Disc V08 Left
7	FM0.2008S	Fusello V08 CRG 8-17 SX Co.	Stub Axle V08 CRG 8-17 LF Co.
8	AFS.02018	Mozzo Disco Ant.Fe V08 17-17 Nero	Front BrakeDisc Hub V08 D17-17
9	FMN.00321	Mozzo Ant.125 Ruota Nero Co	Front Wheel Hub 125 Black Co
10	FM0.2005S	Pinza Anteriore V08 SX Co	Front Brake Caliper V08 LF Co
11	AFS.00246	Chiavetta Assale 2 pioli Nr	Rear Axle KEY Black 2 pivot
12	AFN.00286	Dado M 8 Metalblock	Nut M 8 Metalblock
13	AFN.00047	Rondella Ondulata 8	Undulated Washer 8
14	AFN.00107	Vite M 8x 25 Esagonale	M 8 x 25 Socket Head Screw
15	AFN.00105	Rondella 6,5-12x1,5	Washer 6,5-12x1,5
16	AFN.00234	Dado M 6 Metalblock	Nut M 6 Metalblock

A

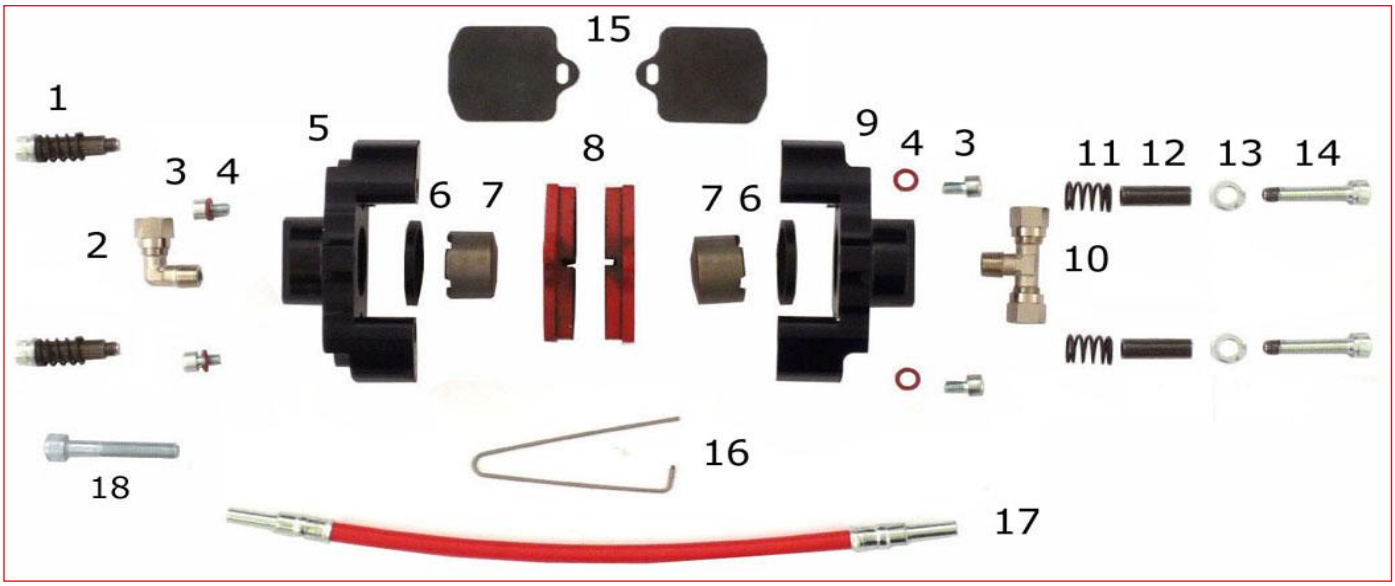

ES	COD	DESCRIZIONE	ITEMS
	FM0.2005D	Pinza Anteriore V08 DX Comp	Front Brake Caliper V08 RH Co
	FM0.2005S	Pinza Anteriore V08 SX Comp	Front Brake Caliper V08 LF Co
1	FM0.02003	Vite Molla Pastiglia Ant.V08	Front BrakePad Spring V08 Co
2	AFN.00409	Raccordo L Per Pinza	Brake Caliper Fitting L
3	AFN.00403	Vite M 5x 8 Cilindrica	M 5 x 8 Socket Head Screw
4	AFN.00402	Rondella RAME 5-10x1,5	Copper Washer 5-10x1,5
5	SAN.2005S	Semi Pinza V08 A.DX/SX C/OR	Half F.CaliperV08 RH/LFw/ear
6	AFS.00179	Gommino Pinza UP/V04/V05 Ant.	UP/V04/V05 Fr. Piston Seal
7	SD1.00370	Pistoncino PinzaUP/V04-05-08 A	UP/V04/V05/V08 Fr.Brake Piston
8	AFS.02001	Pastiglia Freno V08 Ant.	Front Brake Pad V08
9	SAN.2005D	Semi Pinza V08 A.DX/SX N/OR	Half F.CaliperV08 RH/LFn/ear
10	AFN.01367	Raccordo T Per Pinza	Fitting T Brake Caliper
11	SBN.02003	Molla Pastiglia Ant.V08 Nera	Front Brake Pad SpringV08 Bl.
12	SBN.02015	Distanziale Pastiglia Ant.V08	Front BrakePad SpringSpacer V08
13	AFN.00105	Rondella 6,5-12x1,5	Washer 6,5-12x1,5
14	AFN.00281	Vite M 6x 30 Cilindrica	M 6 x 30 Socket Head Screw
15	SBN.01973	Spessore Pastiglia V08 Ant.	Brake Pad Spacer V08 Front
16	AFS.00892	Spina Sicurezza V08 Ant.	Safety Pin V08 Front
17	AFS.00429	Tubo Freno V08 Ant.Cod.mm 250	Brake Tube V08 Fr.Tang mm 250
18	AFN.00159	Vite M 8x 45 Cilindrica	M 8 x 45 Socket Head Screw

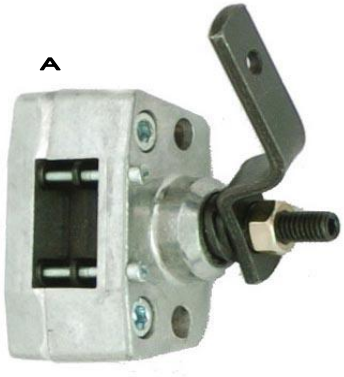

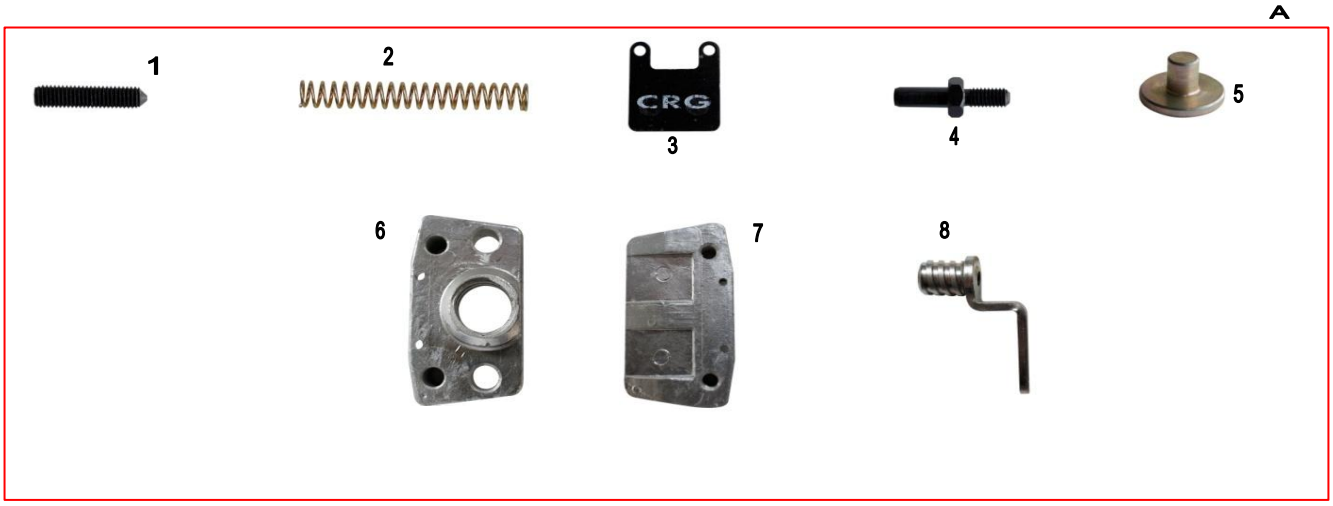

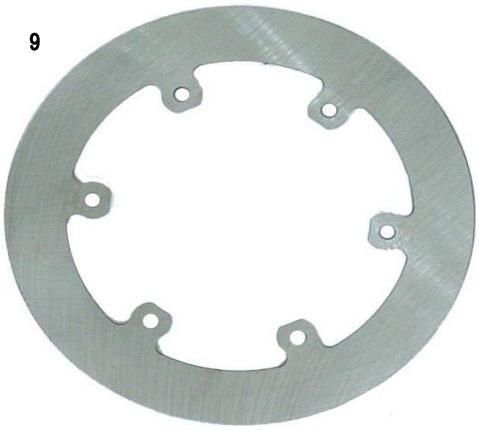

ES	COD	DESCRIZIONE	ITEMS
A	FM0.00458	Pinza Puffo Completa	Rear Brake Caliper Puffo
1	AFN.00498	Grano M8x35 Pinza Puffo	Grain M8x35 BrakeCaliper Puffo
2	FZ0.00517	Molla Freno Puffo	Puffo Brake Spring
3	AFS.00438	Pastiglia Freno Puffo	Brake Pad Puffo
4	FBN.01086	Perno Pinza Puffo	Caliper Pivot Puffo
5	SL1.00454	Pistoncino Pinza Puffo	Piston PUFFO Caliper
6	SL1.0538D	Semi Pinza Puffo DX	Half Caliper Puffo Right
7	SL1.0538S	Semi Pinza Puffo SX	Half Caliper Puffo Left
8	SBN.00467	Svitone Pinza Puffo	Puffo Brake Caliper Unscrew
9	SL1.00490	Disco Freno Puffo	Brake Disc Puffo

ES	COD	DESCRIZIONE	ITEMS
1	SBN.01566	Asta Freno cm.24 Nera	Draw Pin cm.24 Black
1	SBN.00565	Asta Freno cm.27 Nera	Draw Pin cm.27 Black
1	SBN.00566	Asta Freno cm.28 Nera	Draw Pin cm.28 Black
1	SBN.00935	Asta Freno cm.29 Nera	Draw Pin cm.29 Black
1	SBN.01518	Asta Freno cm.30 Nera	Draw Pin cm.30 Black
1	SBN.00933	Asta Freno cm.32 Nera	Draw Pin cm.32 Black
1	SBN.00704	Asta Freno cm.33 Nera	Draw Pin cm.33 Black
1	SBN.01357	Asta Freno cm.34 Nera	Draw Pin cm.34 Black
1	SBN.00826	Asta Freno cm.35,5 Nera	Draw Pin cm.35,5 Black
1	SBN.00828	Asta Freno cm.37 Nera	Draw Pin cm.37 Black
1	SBN.00744	Asta Freno cm.38 Nera	Draw Pin cm.38 Black
1	SBN.00931	Asta Freno cm.40 Nera	Draw Pin cm.40 Black
1	SBN.00842	Asta Freno cm.41 Nera	Draw Pin cm.41 Black
1	SBN.00223	Asta Freno cm.42 Nera	Draw Pin cm.42 Black
1	SBN.00888	Asta Freno cm.43 Nera	Draw Pin cm.43 Black
1	SBN.00653	Asta Freno cm.44 Nera	Draw Pin cm.44 Black
1	SBN.00918	Asta Freno cm.45 Nera	Draw Pin cm.45 Black
1	SBN.00932	Asta Freno cm.46 Nera	Draw Pin cm.46 Black
1	SBN.00801	Asta Freno cm.48 Nera	Draw Pin cm.48 Black
1	SBN.00802	Asta Freno cm.49 Nera	Draw Pin cm.49 Black
1	SBN.01358	Asta Freno cm.52 Nera	Draw Pin cm.52 Black
1	SBN.00804	Asta Freno cm.55 Nera	Draw Pin cm.55 Black
A	FK0.00918	Asta Freno Comp.CM.45 100cc	Draw Pin 100CC CM.45 Co
1	SBN.00918	Asta Freno cm.45 Nera	Draw Pin cm.45 Black
2	AFS.00216	Forchetta Semplice STD	Simple Fork Standard
3	AFS.00224	Clift STD	Clift STD
4	AFN.00093	Dado M 6	Nut M 6
B	FK0.00223	Asta Freno Comp.CM.42 125cc	Draw Pin 125CC CM.42 Co
1	SBN.00918	Asta Freno cm.45 Nera	Draw Pin cm.45 Black
2	AFS.00216	Forchetta Semplice STD	Simple Fork Standard
3	AFS.00224	Clift STD	Clift STD
4	AFN.00093	Dado M 6	Nut M 6

C

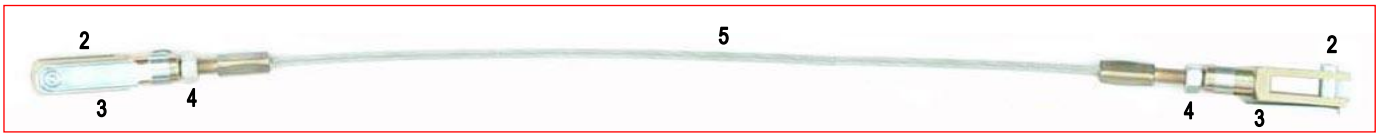

D

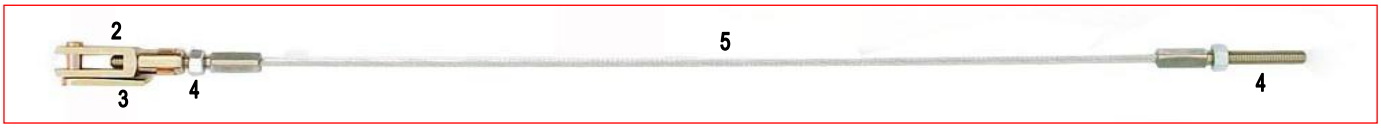

ES	COD	DESCRIZIONE	ITEMS
1	SBN.00223	Asta Freno cm.42 Nera	Draw Pin cm.42 Black
2	AFS.00216	Forchetta Semplice STD	Simple Fork Standard
3	AFS.00224	Clift STD	Clift STD
4	AFN.00093	Dado M 6	Nut M 6
5	AFS.00805	Cavo Sicurezza cm.25	Safety Cable Cm.25
5	AFS.00806	Cavo Sicurezza cm.27	Safety Cable Cm.27
5	AFS.00807	Cavo Sicurezza cm.29	Safety Cable Cm.29
5	AFS.00808	Cavo Sicurezza cm.33	Safety Cable Cm.33
5	AFS.00745	Cavo Sicurezza cm.39	Safety Cable Cm.39
5	AFS.00227	Cavo Sicurezza cm.41,5	Safety Cable Cm.41,5
5	AFS.00809	Cavo Sicurezza cm.44	Safety Cable Cm.44
5	AFS.01330	Cavo Sicurezza cm.46	Safety Cable Cm.46
5	AFS.00810	Cavo Sicurezza cm.48,5	Safety Cable Cm.48,5
5	AFS.00811	Cavo Sicurezza cm.52	Safety Cable Cm.52
5	AFS.00812	Cavo Sicurezza cm.54	Safety Cable Cm.54
X	AFS.01190	Forchetta Semplice Corta	Short Fork Simple
X	AFS.01189	Clift Corta	Short Clift
C	FK0.00809	Cavo Freno Comp.CM.44 100cc	Safety Cable 100CC Comp.CM.44
5	AFS.00809	Cavo Sicurezza cm.44	Safety Cable Cm.44
2	AFS.00216	Forchetta Semplice STD	Simple Fork Standard
3	AFS.00224	Clift STD	Clift STD
4	AFN.00093	Dado M 6	Nut M 6
D	FK0.00227	Cavo Freno Comp.CM.41,5 125cc	Safety Cable 125CC Comp.CM.41,5
5	AFS.00227	Cavo Sicurezza cm.41,5	Safety Cable Cm.41,5
2	AFS.00216	Forchetta Semplice STD	Simple Fork Standard
3	AFS.00224	Clift STD	Clift STD
4	AFN.00093	Dado M 6	Nut M 6

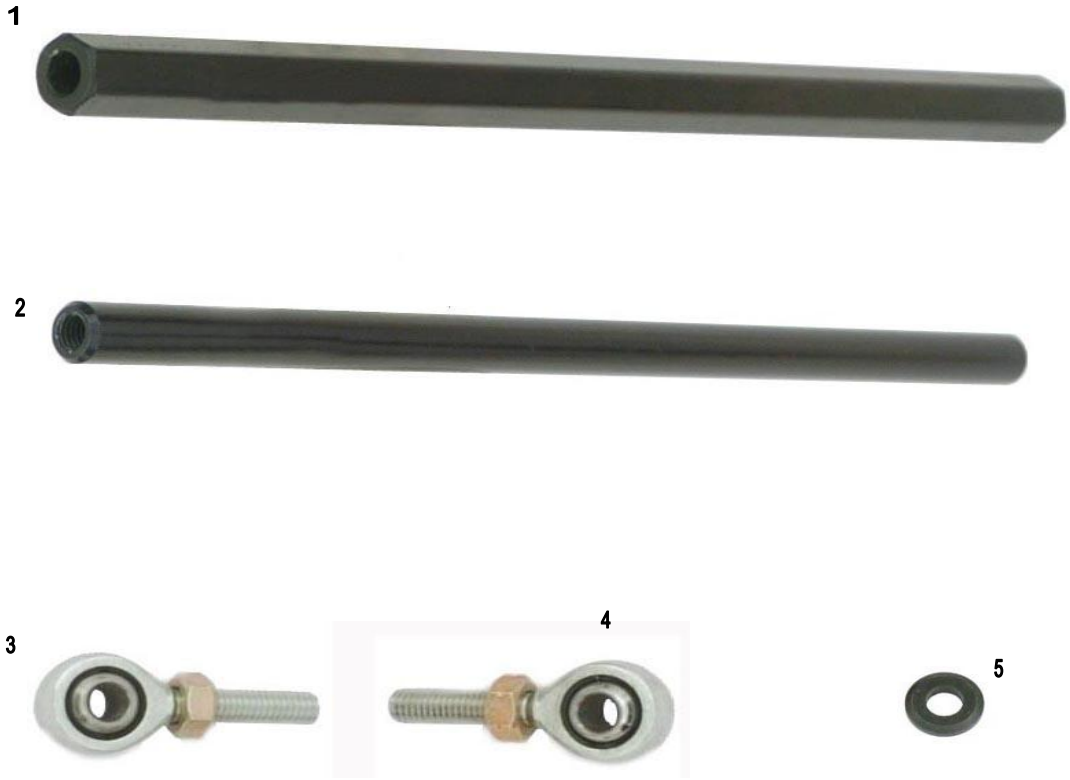

ES	COD	DESCRIZIONE	ITEMS
1	FAN.01808	Barretta Sterzo ESA Cm.16,5	Round Track Rod Cm.16,5
1	FAN.00718	Barretta Sterzo ESA Cm.19	Hexagonal Track Rod Cm.19
1	FAN.00717	Barretta Sterzo ESA Cm.20	Hexagonal Track Rod Cm.20
1	FAN.01538	Barretta Sterzo ESA Cm.20,7	Hexagonal TrackRod Cm.20,7
1	FAN.01441	Barretta Sterzo ESA Cm.21	Hexagonal Track Rod Cm.21
1	FAN.01539	Barretta Sterzo ESA Cm.21,7	Hexagonal TrackRod Cm.21,7
1	FAN.00995	Barretta Sterzo ESA Cm.22	Hexagonal Track Rod Cm.22
1	FK0.00546	Barretta ESA Cm.23 Com. Mini 2011	Frack Rod Mini 2011 Com.23
1	FAN.00546	Barretta Sterzo ESA Cm.23	Hexagonal Track Rod Cm.23
1	FK0.00813	Barretta ESA Cm.24 Com. Mini 2011	Frack Rod Mini 2011 Com.24
1	FAN.00813	Barretta Sterzo ESA Cm.24	Hexagonal Track Rod Cm.24
1	FAN.00814	Barretta Sterzo ESA Cm.25	Hexagonal Track Rod Cm.25
1	FAN.00822	Barretta Sterzo ESA Cm.26	Hexagonal Track Rod Cm.26
1	FAN.00815	Barretta Sterzo ESA Cm.26,5	Hexagonal Track Rod Cm.26,5
1	FAN.00612	Barretta Sterzo ESA Cm.27	Hexagonal Track Rod Cm.27
1	FAN.00816	Barretta Sterzo ESA Cm.27,5	Hexagonal Track Rod Cm.27,5
1	FAN.00045	Barretta Sterzo ESA Cm.28	Hexagonal Track Rod Cm.28
1	FAN.02027	Barretta Sterzo ESA Cm.28,5	Hexagonal Track Rod Cm.28,5
1	FAN.02028	Barretta Sterzo ESA Cm.33	Hexagonal Track Rod Cm.33
2	FAN.00070	Barretta Sterzo Cm.18	Round Track Rod Cm.18
3	AFS.0047D	Uniball Sterzo DX	Right Ball Joint
4	AFS.0047S	Uniball Sterzo SX	Left Ball Joint
5	FBN.00252	Spessore 8,5-14x 5 Barretta	Spacer 8,5-14x 5 Track Rod

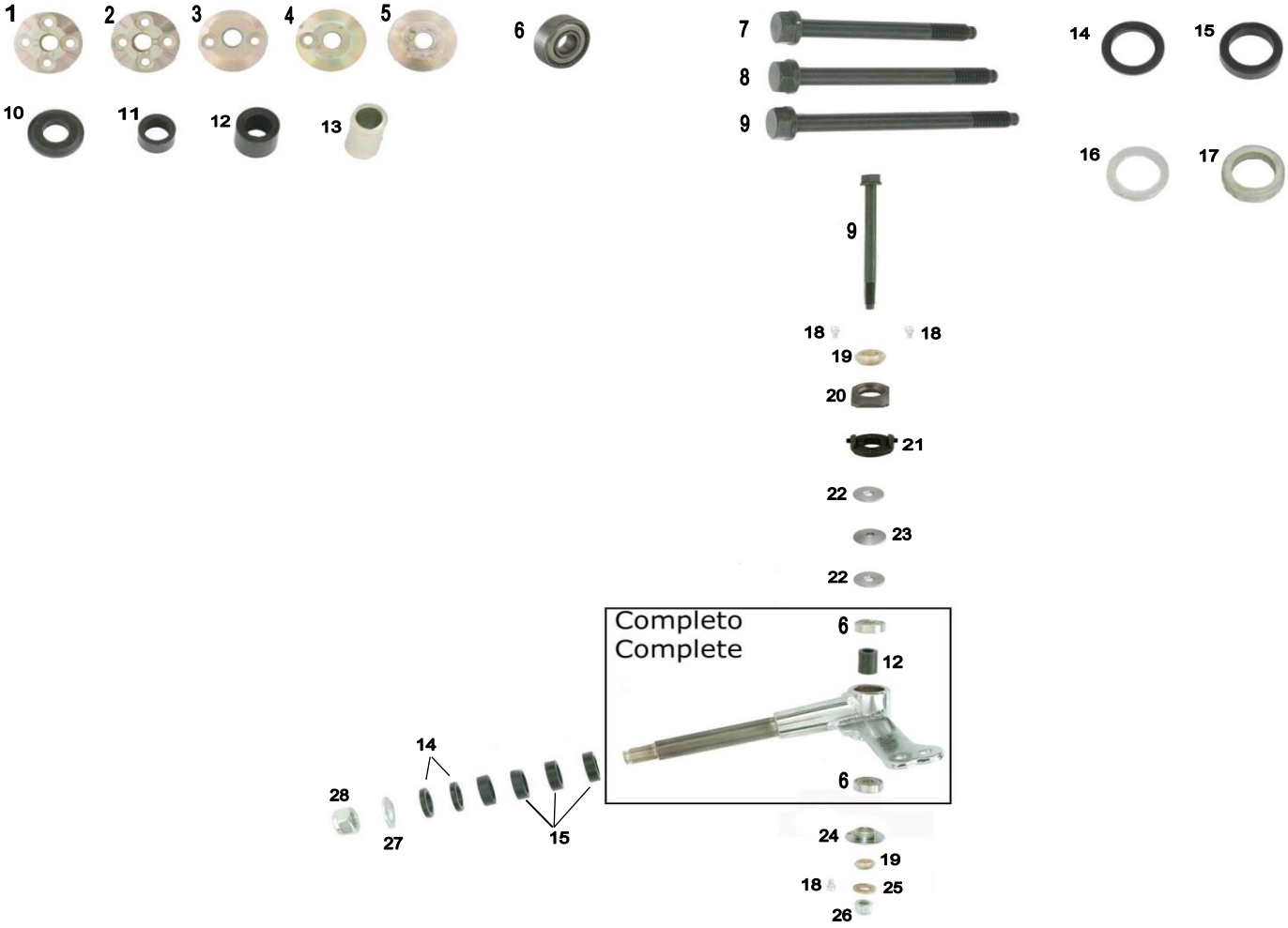

ES	COD	DESCRIZIONE	ITEMS
1	FL2.1350D	Caster Eccentrico 4F D 8 DX	Caster Right 4H D8
2	FL2.1350S	Caster Eccentrico 4F D 8 SX	Caster Left 4H D 8
3	FZ0.01351	Caster Acqua	2 Hole Cam (Wet)
4	FZ0.01352	Caster Eccentrico 1Foro	1 Hole Cam
5	FZ0.01353	Caster Fisso	FIXED Cam
6	AFN.00055	Cuscinetto 608 Fusello	608 Bearing For Spindle
7	FBN.01197	Vite Fusello Puffo Nera	Stub Axle Bolt Puffo Black
8	FBN.00176	Vite Fusello Mini NA Nera	Stub Axle Bolt Mini NA Black
9	FBN.00063	Vite Fusello ECO-NA3 Nera	Stub Axle Bolt ECO-NA3 Black
10	FBN.00064	Spessore 8,5-18x 4 Fusello	Spacer 8,5-18x 4 Stub Axle
11	SBN.00089	Spessore Int. Fusello 7mm	Stub Axle Int.Spacer 7mm Bl.
12	SBN.00056	Spessore Int. Fusello 12mm STD	Stub Axle Int.Spacer 12mm STD
13	SL1.01043	Spessore Int. Fusello 26mm Mini	Stub Axle Int. Spacer 26mm Mini
14	FAN.00068	Distanziale Perno Fus 4mm	Stub Axle Spacer 4mm Black
15	FAN.00066	Distanziale Perno Fus 8mm	Stub Axle Spacer 8mm Black
16	SL1.00068	Distanziale Perno Fusello 4mm	Stub Axle Pivot Spacer 4mm
17	SL1.00066	Distanziale Perno Fusello 8mm	Stub Axle Pivot Spacer 8mm
18	AFN.00278	Vite M 4x 6 Cilindrica	M 4 x 6 Socket Head Screw
19	FZ0.02450	Boccola Mezza Sfera Caster	Bushing Half Caster
20	AFS.02352	Caster Porta Piastrina A	Caster Plate Support A
21	AFS.02353	Caster Piastrina Alta B	CASTER High Plate B
22	FZ0.01607	Spessore 10-28x6 Fusello Piano	Stub Axle Space 10-28x6 Plane
23	FZ0.01719	Spessore 10-28x6 Fusello Conico	Stub Axle Space 10-28x6 Con.
24	FZ0.01602	Caster Fisso Sferico	Spherical Fixed Cam
25	AFN.00108	Rondella 8,5 -18x4	Washer 8,5 -18x4
26	AFN.00128	Dado M 8 Autobloccante Alto	Nut M 8 High Self-Locking
27	AFN.01564	Rondella 15 -29,5x2,5	Washer 15 -29,5x2,5
28	AFN.00058	Dado M14x1,5 Autobloccante	Nut M14 x 1,5 Self-locking

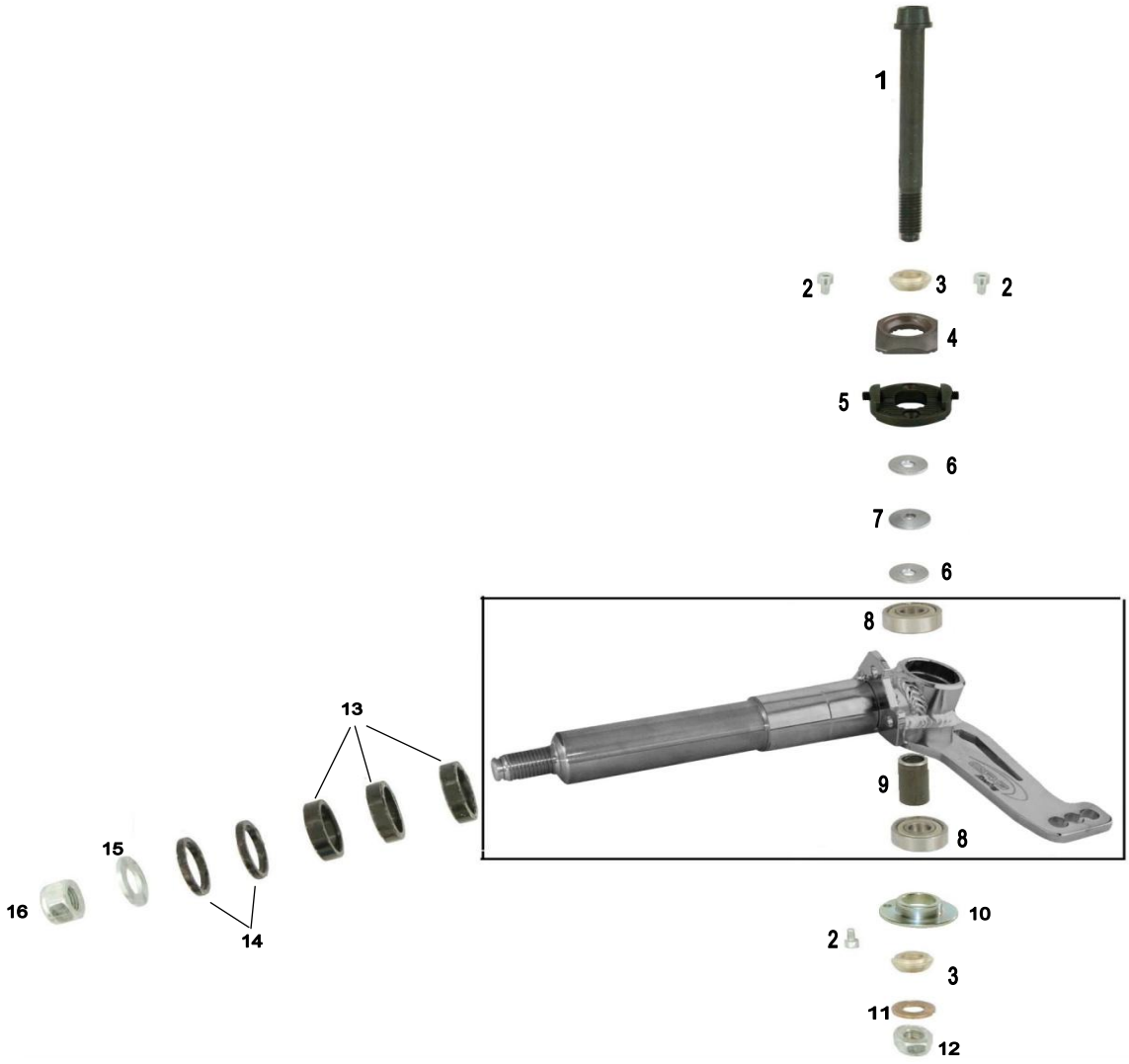

ES	COD	DESCRIZIONE	ITEMS
1	FBN.02401	Vite Fusello 10x110 Nera	Stub Axle Bolt 10x110 Black
2	AFN.02389	Vite M 4x 10 Svasata	M 4x 10 Countersunk Head Screw
3	FZ0.02450	Boccola Mezza Sfera Caster	Bushing Half Caster
4	AFS.02352	Caster Porta Piastrina A	Caster Plate Support A
5	AFS.02353	Caster Piastrina Alta B	CASTER High Plate B
6	FZ0.01607	Spessore 10-28x6 Fusello Piano	Stub Axle Space 10-28x6 Plane
7	FZ0.01719	Spessore 10-28x6 Fusello Conico	Stub Axle Space 10-28x6 Con.
8	AFN.00055	Cuscinetto 608 Fusello	608 Bearing For Spindle
9	SBN.01605	Spessore Int. Fusello D10	StubAxle Spacer x D10
10	FZ0.01602	Caster Fisso Sferico	Spherical Fixed Cam
11	AFN.00108	Rondella 8,5 -18x4	Washer 8,5 -18x4
12	AFN.00128	Dado M 8 Autobloccante Alto	Nut M 8 High Self-Locking
13	FAN.01738	Distanziale Perno Fus.25 4mm Nr	Stub Axle Spacer 25 4mm Black
14	FAN.01739	Distanziale Perno Fus.25 8mm Nr	Stub Axle Spacer 25 8mm Black
15	AFN.01564	Rondella 15 -29,5x2,5	Washer 15 -29,5x2,5
16	AFN.00058	Dado M14x1,5 Autobloccante	Nut M14 x 1,5 Self-locking

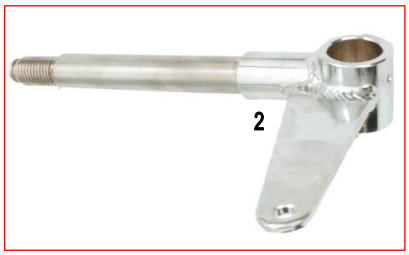

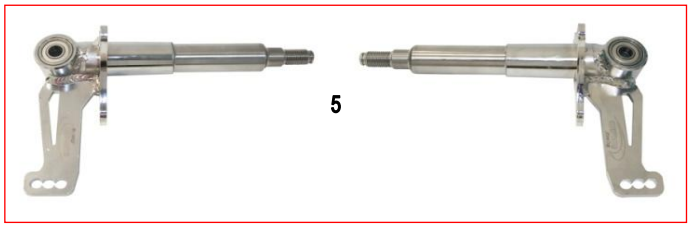

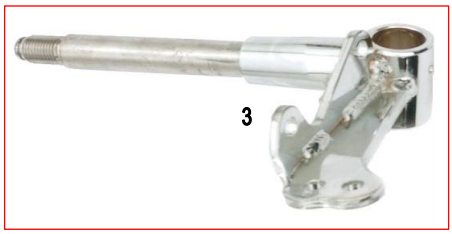

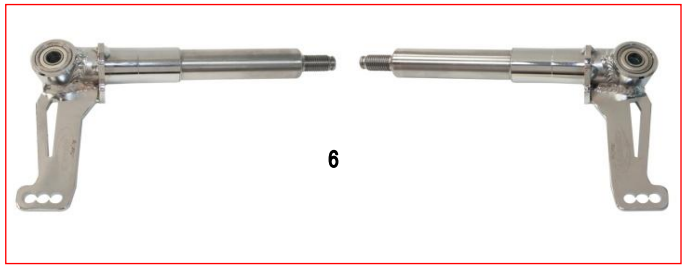

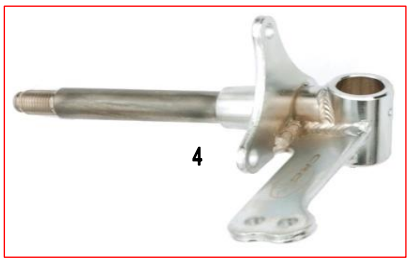

ES	COD	DESCRIZIONE	ITEMS
1	SC0.0710S	Fusello Mini NA3 SX Crom	Stub Axle Mini NA3 LF Chrom
1	SC0.0710D	Fusello Mini NA3 DX Crom	Stub Axle Mini NA3 RH Chrom
1	FM0.0710S	Fusello Mini NA3 SX Comp	Stub Axle Mini NA3 LF Comp
1	FM0.0710D	Fusello Mini NA3 DX Comp	Stub Axle Mini NA3 RH Comp
1	SC0.0547S	Fusello Mini/Baby SX Crom	Stub Axle Mini/Baby LF Chrom
1	SC0.0547D	Fusello Mini/Baby DX Crom	Stub Axle Mini/Baby RH Chrom
1	FM0.0547S	Fusello Mini/Baby SX Comp	Stub Axle Mini/Baby LF Comp
1	FM0.0547D	Fusello Mini/Baby DX Comp	Stub Axle Mini/Baby RH Comp
2	SC0.0719S	Fusello Miniclass SX Crom	Stub Axle Miniclass LF Chrom
2	SC0.0719D	Fusello Miniclass DX Crom	Stub Axle Miniclass RH Chrom
2	FM0.0719S	Fusello Miniclass SX Comp	Stub Axle Miniclass LF Comp
2	FM0.0719D	Fusello Miniclass DX Comp	Stub Axle Miniclass RH Comp
3	SC0.2008D	Fusello V08 CRG 8-17 DX Cr	Stub Axle V08 CRG 8-17 RH Ch
3	SC0.2008S	Fusello V08 CRG 8-17 SX Cr	Stub Axle V08 CRG 8-17 LF Ch
3	FM0.2008D	Fusello V08 CRG 8-17 DX Co	Stub Axle V08 CRG 8-17 RH Co
3	FM0.2008S	Fusello V08 CRG 8-17 SX Co	Stub Axle V08 CRG 8-17 LF Co
3	SC0.0054D	Fusello 100 CRG 8-17 DX Crom	Stub Axle 100 CRG 8-17 RH Ch
3	SC0.0054S	Fusello 100 CRG 8-17 SX Crom	Stub Axle 100 CRG 8-17 LF Ch
3	FM0.0054D	Fusello 100 CRG 8-17 DX Comp	Stub Axle 100 CRG 8-17 RH Co
3	FM0.0054S	Fusello 100 CRG 8-17 SX Comp	Stub Axle 100 CRG 8-17 LF Co
4	SC0.1864D	Fusello CRG KF1-KF3 10-25 DX	Stub Axle CRG KF1-KF3 10-25 RH
4	SC0.1864S	Fusello CRG KF1-KF3 10-25 SX	Stub Axle CRG KF1-KF3 10-25 LF
4	FM0.1864D	Fusello CRG KF1-KF3 10-25 DX	Stub Axle CRG KF1-KF3 10-25 RH Co
4	FM0.1864S	Fusello CRG KF1-KF3 10-25 SX	Stub Axle CRG KF1-KF3 10-25 LF Co
4	SC0.1753D	Fusello V05 CRG 10-25 DX Cr	Stub Axle V05 CRG 10-25 RH Ch
4	SC0.1753S	Fusello V05 CRG 10-25 SX Cr	Stub Axle V05 CRG 10-25 LF Ch
4	FM0.1753D	Fusello V05 CRG 10-25 DX Co	Stub Axle V05 CRG 10-25 RH Co
4	FM0.1753S	Fusello V05 CRG 10-25 SX Co	Stub Axle V05 CRG 10-25 LF Co
5	FM0.2866S/D	Fusello CRG KF1-KF3 10-25 2012	Stub Axle CRG KF1-KF3 10-25 2012
6	FM0.2865S/D	Fusello CRG V05 10-25 2012	Stub Axle CRG V05 10-25 2012

ES	COD	DESCRIZIONE	ITEMS
A	FK0.02352	Set Caster Sniper New Comp.	Sniper Caster System New Co
B	FK0.02353	Set Caster Sniper New Sup.	Sniper Caster System New UP-Side
1	FBN.02401	Vite Fusello 10x110 Nera	Stub Axle Bolt 10x110 Black
2	FZ0.02450	Boccola Mezza Sfera Caster	Bushing Half Caster
3	AFN.02389	Vite M 4x 10 Svasata	M 4x 10 Countersunk Head Screw
4	AFS.02352	Caster Porta Piastrina A	Caster Plate Support A
5	AFN.02390	Grani M5x10 Caster Doppio	Grain M5x10 Double Caster
6	AFS.02353	Caster Piastrina Alta B	CASTER High Plate B
7	AFN.01983	Vite M 4x 8 Cilindrica	M 4 x 8 Socket Head Screw
8	FZ0.01602	Caster Fisso Sferico	Spherical Fixed Cam
9	FZ0.01607	Spessore 10-28x6 Fusello Piano	Stub Axle Space 10-28x6 Plane
10	FZ0.01719	Spessore 10-28x6 Fusello Conico	Stub Axle Space 10-28x6 Con.
11	AFN.02417	Rondella 10-20x2	Washer 10-20x2
12	AFN.02393	Dado M10 Autobloccante Alto	Nut M 10 High Self-Locking

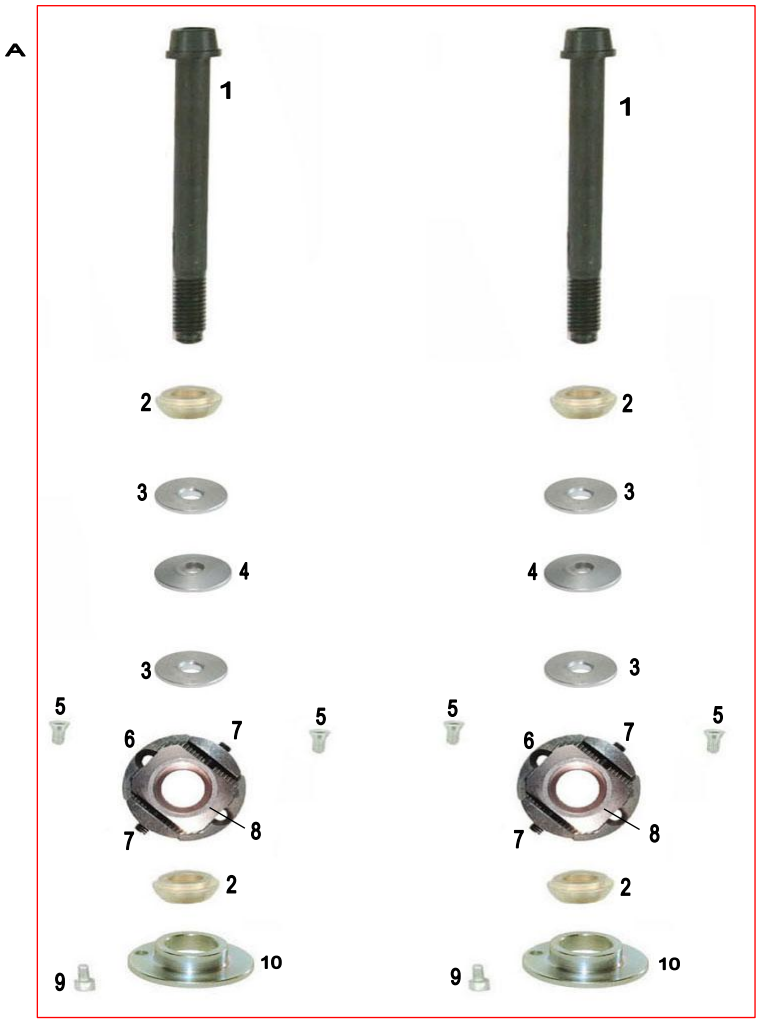

ES	COD	DESCRIZIONE	ITEMS
A	FK0.02666	Set Caster Sniper Mini D 8 Comp	Sniper Caster System Mini D 8 Comp
1	FBN.02391	Vite Fusello 8x110 Nera	Stub Axle Bolt 8x110 Black
2	FZ0.02666	Boccola Mezza Sfera Caster	Bushing Half Caster
3	FZ0.02664	Spessore 8-28x4 Fusello Piano	Stub Axle Space 8-28x4 Plane
4	FZ0.02665	Spessore 8-28x4 Fusello Conico	Stub Axle Space 8-28x4 Con.
5	AFN.00019	Vite M 4x 8 Svasata	M 4x 8 Countersunk Head Screw
6	AFS.02352	Caster Porta Piastrina A	Caster Plate Support A
7	AFN.02390	Grani M5x10 Caster Doppio	Grain M5x10 Double Caster
8	AFS.02353	Caster Piastrina Alta B	Caster High Plate B
9	AFN.02148	Vite M 4x 10 Cilindrica	M 4x 10 Socket Head Screw
10	FZ0.02729	Caster Fisso Sferico Mini	Spherical Fixed Cam Mini

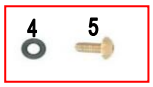

ES	COD	DESCRIZIONE	ITEMS
1	AFS.01559	Set CerchiMG H130-H210 NoRazze	MG Rims SetCRG H130-H210 Solid
1	AFS.01613	Set CerchiMG H132-H212 NoRazze	MG Rims SetCRG H132-H212 Solid
1	AFS.01695	Set CerchiMG H130-H180 NoRazze	MG Rims SetCRG H130-H180 Solid
2	FM0.00455	Cerchio H115 All.C/Valvola	Mini Rim H115 Alu Compl.
3	FM0.01186	Cerchio H140 All.C/Valvola	MINI RIM H140 Alu Compl.
4	AFN.00172	OR Cerchi	OR >>> Wheels
5	CRG.00173	Vite Cerchio 5x12 Comp.	M 5 x 12 Wheel Screw Comp.
6	AFS.00168	Valvola Tubless	Tubless Valve
7	AFN.00008	Cuscinetto 6003 MozzoAnt.	Bearing 6003 Front Hub
8	AFS.00943	Cerchio H130 CRG Mg.Co.NoRazze	Mg Front Rim H130 CRG Solid
8	AFS.02274	Cerchio H132 CRG Mg.Co.NoRazze	MG Front Rim H132 CRG Solid
9	AFS.02173	Cerchio H132 CRG Mg.Co.c/Razze	MG Front Rim H132 CRG Vented
10	AFS.00944	Cerchio H180 CRG Mg.Co.NoRazze	MG Front Rim H180 CRG Solid
10	AFS.00945	Cerchio H210 CRG Mg.Co.NoRazze	MG Front Rim H210 CRG Solid
10	AFS.02275	Cerchio H212 CRG Mg.Co.NoRazze	MG Front Rim H212 CRG Solid
11	AFS.01174	Cerchio H212 CRG Mg.Co.c/Razze	MG Front Rim H212 CRG Vented
11	AFS.02171	Cerchio H214 CRG Mg.Co.c/Razze	MG Front Rim H214 CRG Vented
11	AFS.02172	Cerchio H182 CRG Mg.Co.c/Razze	MG Front Rim H182 CRG Vented

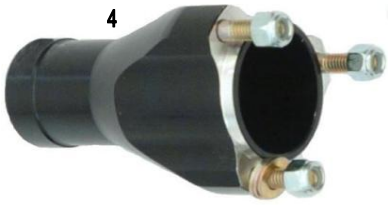

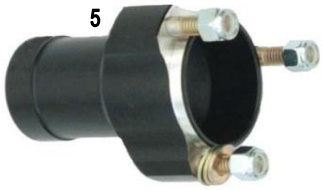

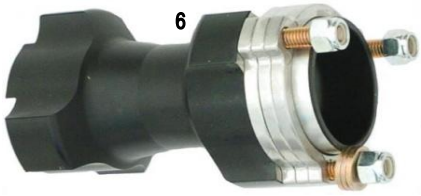

ES	COD	DESCRIZIONE	ITEMS
1	AFN.00008	Cuscinetto 6003 MozzoAnt.	Bearing 6003 Front Hub
1	AFN.01750	Cuscinetto 6905 Mozzo Ant.	Bearing 6905 Front Hub
2	SL1.00477	Distanziale Ruota V99 All.	Wheel Alu.Spacer V99
3	FMN.00840	Mozzo Ant.100 17 Corto Nr Co	Front WheelHub100 ShortBlack Co
4	FMN.00841	Mozzo Ant.100 17 Lungo Nr Co	Front WheelHub100 Long Black Co
5	FMN.00124	Mozzo Ant.100 17 Medio Nr Co	Front WheelHub100 Med. Black Co
6	FMN.00475	Mozzo Ant.125 V99 All.Nero Co	Front WheelHub V99 Black Co
7	FMN.00321	Mozzo Ant.125 Ruota Nero Co	Front Wheel Hub 125 Black Co
8	FMN.01762	Mozzo Ant.100 25 Medio Nr	Front WheelHub100 ME.D25 Bl
9	FMN.01773	Mozzo Ant.100 25 Lungo Nr	Front WheelHub100 LO.D25 Bl
10	FMN.01865	Mozzo Ruota Ant. All. V06 D25	Front WHEEL HUB ALU V06 25 Co
11	AFS.00274	Prigioniero M6 Lungo	Prisonier M6 (Pivot)
12	AFS.00126	Prigioniero M8	Prisonier M8

ES	COD	D E S C R I Z I O N E	I T E M S
1	FMN.00568	Mozzo Post.25x 40 Nero Comp.	Rear Wheel Hub 25x 40 Black Co
2	FMN.00851	Mozzo Post.25x 75 Nero Comp.	Rear Wheel Hub 25x 75 Black Co
3	FMN.00850	Mozzo Post.30x 40 Nero Comp.	Rear Wheel Hub 30x 40 Black Co
3	FMN.00735	Mozzo Post.30x 75 Nero Comp.	Rear Wheel Hub 30x 75 Black Co
4	FMN.00847	Mozzo Post.40x 40 Nero Comp.	Rear Wheel Hub 40x 40 Black Co
4	FMN.00724	Mozzo Post.40x 70 AcquaNR Co.	Rear Wheel Hub 40x 70RainBL Co
5	FMN.00848	Mozzo Post.40x 75 Nero Comp.	Rear Wheel Hub 40x 75 Black Co
6	FMN.00444	Mozzo Post.40x105 NERO Comp.	Rear Wheel Hub 40x105 Black Co
6	FMN.00849	Mozzo Post.40x125 Nero Comp.	Rear Wheel Hub 40x125 Black Co
7	FMN.00843	Mozzo Post.50x 75 Nero Comp.	Rear Wheel Hub 50x 75 Black Co
8	FMN.00845	Mozzo Post.50x 85 Nero Comp.	Rear Wheel Hub 50x 85 Black Co
9	FMN.00131	Mozzo Post.50x 95 Nero Comp.	Rear Wheel Hub 50x 95 Black Co
10	FMN.00846	Mozzo Post.50x105 Nero Comp.	Rear Wheel Hub 50x105 Black Co
10	FMN.01721	Mozzo Post.50x125 Nero Comp.	Rear Wheel Hub 50x125 Black Co
11	FMN.01922	Mozzo Post.50x 95 Flangiato Co	Rear Wheel Hub 50x 95 Flang.Co
12	FMN.01923	Mozzo Post.50x 85 Flangiato Co	Rear Wheel Hub 50x 85 Flang.Co

MOZZI CORONA / SPROCKET HUBS

ES	COD	DESCRIZIONE	ITEMS
1	FMN.00569	Mozzo Corona 25 Puffo	Ring Carrier Puffo 25
1	CRG.00569	Mozzo Corona CRG 25 Puffo	Ring Carrier Puffo 25 CRG
2	FMN.00736	Mozzo Corona 30 100 Completa	Ring Carrier 100 30 Complete
2	CRG.00736	Mozzo Corona CRG 30 100	Ring Carrier 100 30 CRG
3	FMN.00445	Mozzo Corona 40 100 Completa	Ring Carrier 100 40 Complete
3	CRG.00445	Mozzo Corona CRG 40 100	Ring Carrier 100 40 CRG
4	FMN.00135	Mozzo Corona 50 100 Completa	Ring Carrier 100 50 Complete
5	CRG.00025	Mozzo Corona 50 100 CRG	Ring Carrier 100 50 CRG
6	FMG.00025	Mozzo Corona 50 100 Oro altri Light	Ring Carrier 100 50 Gold Univ.Light
7	AFN.02154	Vite M 6x 35 Cilindirca 12.9	M 6x 35 Socket Head Screw 12.9
8	AFN.00136	Rondella 6,5-10x1 Ottone	Brass Washer 6,5-10x1

MOZZI DISCO / BRAKE DISC HUBS

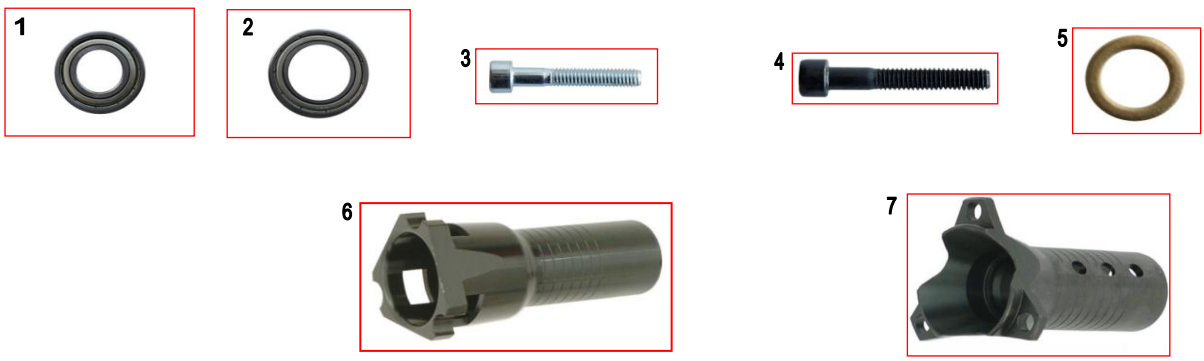

ES	COD	DESCRIZIONE	ITEMS
1	AFN.00008	Cuscinetto 6003 Mozzo Ant.	Bearing 6003 Front Hub
2	AFN.01750	Cuscinetto 6905 Mozzo Ant.	Bearing 6905 Front Hub
3	AFN.00137	Vite M 6x 35 Cilindrica	M 6x 35 Socket Head Screw
4	AFN.02154	Vite M 6x 35 Cilindirca 12.9	M 6x 35 Socket Head Screw 12.9
5	AFN.00136	Rondella 6,5-10x1 Ottone	BrassWasher 6,5-10x1
6	AFS.01755	Mozzo Disco Anteriore Fe V05 25	Iron Front B.Disc Hub V05 25
6	FM0.01755	Mozzo Disco Anteriore Fe V05 25 Co	Iron Front B.Disc Hub V05 25
7	SAN.01893	Mozzo Disco Anteriore Ergal V05 125	Iron Front B.Disc Hub V05 125
7	FMN.01893	Mozzo Disco Anteriore Eegal V05 12	Iron Front B.Disc Hub V05 125

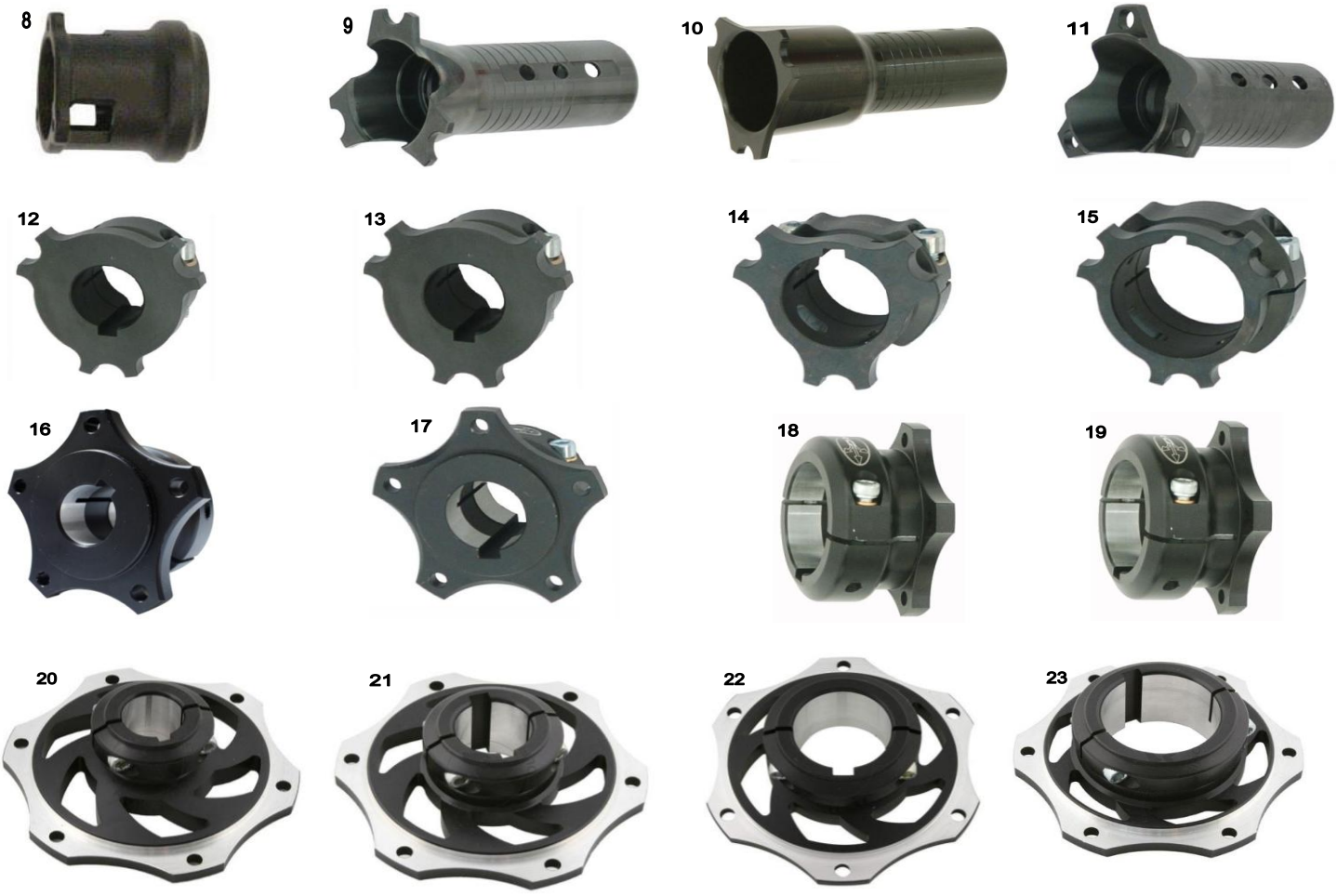

ES	COD	DESCRIZIONE	ITEMS
8	FMN.01867	Mozzo Disco Anteriore All. V06	Alu Front Brake Disc Hub V06
9	AFS.00315	Mozzo Disco Anteriore Fe V04 17	Front Brake Disc Hub V04 17
9	FM0.00315	Mozzo Disco Anteriore Fe V04 17	Front Brake Disc Hub V04 17
10	AFS.01756	Mozzo Disco Anteriore Fe V04 25	Iron Front B.Disc Hub V04 25
10	FM0.01756	Mozzo Disco Anteriore Fe V04 25	Iron Front B.Disc Hub V04 25
11	AFS.02018	Mozzo Disco Anteriore Fe V08 17	Iron Front B.Disc Hub V08 17
11	FM0.02018	Mozzo Disco Anteriore Fe V08 17	Iron Front B.Disc Hub V08 17
12	FM0.00835	Mozzo Disco Posteriore Fe 25 Up	Rear Brake Disc Hub Up 25
13	FM0.00836	Mozzo Disco Posteriore Fe 30 Up	Rear Brake Disc Hub Up 30
14	FM0.00837	Mozzo Disco Posteriore Fe 40 Up	Rear Brake Disc Hub Up 40
15	FM0.00371	Mozzo Disco Posteriore Fe 50 Up	Rear Brake Disc Hub Up 50
16	FMN.00838	Mozzo Disco Post. All.25 NA/V04	Rear Brake Disc Hub NA/V04 25 Al
17	FMN.00748	Mozzo Disco Post. All.30 NA/V04	Rear Brake Disc Hub NA/V04 30 Al.
18	FMN.01250	Mozzo Disco Post. All.40 V04/V05	Rear Brake Disc Hub V04/V05 40 Al.
19	FMN.00238	Mozzo Disco Post. All.50 V04/V05	Rear Brake Disc Hub V04/V05 50 Al.
20	FMN.00585	Mozzo Disco Post. All.25 Puf.	Al.Rear Brake Disc Hub Up 25 Puffo
21	FMN.00834	Mozzo Disco Post. All.30 V08/V99	Al.Rear Brake Disc Hub 30 V08/V99
22	FMN.00453	Mozzo Disco Post. All.40 V08/V99	Al.Rear Brake Disc Hub 40 V08/V99
23	FMN.00832	Mozzo Disco Post.All.50 V08/V99	Al.Rear Brake Disc Hub 50 V08/V99

ES	COD	DESCRIZIONE	ITEMS
1	FC0.00060	Piantone Sterzo Puffo	Steering Column Puffo
2	FC0.00545	Piantone Sterzo Mini/Baby	Steering Column Mini/Baby
3	FC0.01513	Piantone Sterzo CRG 100/125	Steering Column CRG 100/125
3	FC0.01514	Piantone Sterzo CRG EX125	Steering Column CRG EX 125
3	FC0.01636	Piantone Sterzo DD2	Steering Column DD2
3	SC0.01052	Piantone Sterzo CRG No Fori	Steering Column CRG NO Holes
4	FC0.00883	Piantone Sterzo 100 Multiforo	Steering Column 100 +Holes
5	AFS.00243	Supporto Piantone Plastica	Steering Column Support
6	AFN.00154	Seeger D 22 Piantone	Seeger D 22 Steering Column
7	AFN.00153	Uniball Piantone	Steering Column Joint Ball
8	FKN.00356	Kit Boccola Piantone (2)	Steering Column Bushing Kit
8	FAN.00356	Boccola Piantone Nera	Steering Column Bushing Black
8	AFN.00093	Dado M 6	Nut M 6
8	AFN.00357	Grano M6x10 Boccola Piantone	Grain M6x10 Steering Column B.
9	FFN.00175	Mozzo Volante Mini-ECO	Steering Wheel Hub Mini-Eco
10	FFN.00328	Mozzo Volante EX 125	Steering Wheel Hub EX 125
11	FAN.00893	Mozzo Volante 100 Nero	Steering Wheel Hub 100 BLACK
12	FAN.01626	Mozzo Volante Inclinato	Steering Wheel Hub Inclined
13	AFS.00537	Volante Puffo	Steering Wheel Puffo
14	AFS.00174	Volante Diesis CRG ECO-Mini	Steering Wheel Hub CRG Eco-Mini
15	AFS.02887	Volante Diesis CRG Carbon 2012	CRG Steering Wheek Carbon Look2012

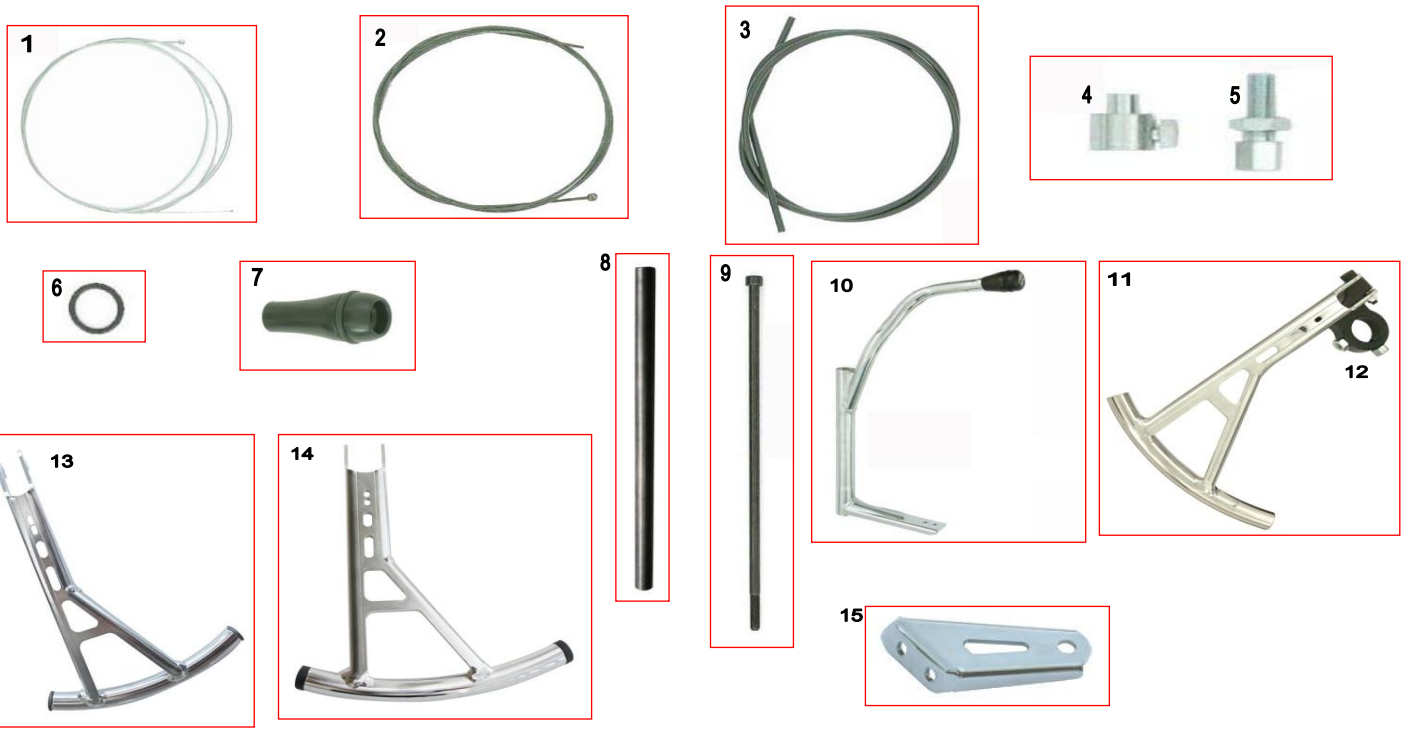

ES	COD	DESCRIZIONE	ITEMS
1	AFS.00515	Filo Gas	Gas Cable
1	AFS.01364	Filo Frizione	Clutch Cable
2	AFS.00590	Filo Freno Meccanico	Brake Cable
3	AMS.00516	Guaina Filo D6 Frizione	Sheater D6 for Clutch
3	AMS.01370	Guaina Filo D5 Gas STD	Sheater D5 for Gas Cable
3	AMS.00591	Guaina Filo D7 Freno Mec.	Sheater D7 for Brake cable
4	AFS.00514	Morsetto Filo	Holdfast
5	AFS.00257	Registro Filo	Cable adjuster
6	AFN.00341	OR Pomolo Leva Cambio	OR Gear Lever Pommel
7	SAN.01766	Pomolo Leva Cambio 06 NR	Gear Rod 125 06 Pommel Black
8	SL1.00342	Spessore Interno Leva 125	Int.Spacer For Shifter 125
9	FBN.00340	Vite Leva Cambio 125cc Nera	125 Gear Lever Screw Black
10	FMN.00339	Leva Cambio CRG 125 Nera Co.	Gear Lever CRG 125 Bl.Co.
	SC0.00339	Leva Cambio CRG 125	Gear Lever CRG 125
	SAN.00348	Asta Leva Cambio 125 Nera	Gear Rod 125 Black
11	CRG.01884	Leva Frizione 2008 Completa	Clutch Lever 2008 Comp.
12	FK0.01925	Kit Attacco Leva Frizione	Gear Lever Connection Kit
13	FK0.01884	Leva Frizione 2008 C/Tappi	Clutch Lever 2008 W/Caps
	SAN.01925	Attacco Leva Frizione 08	Clutch Lever 08 Connection
	AFN.00360	Dado M 5 Autobloccante Basso	Nut M 5 Low Self-Locking
	AFN.00093	Dado M 6	Nut M 6
	AFN.02147	Grano M6x12 Supp.Leva Frizione	Grain M6x12 x Clutch Lever
	AFN.01872	Grano M6x35	Grain M6x35
	AFS.00257	Registro Filo	Cable adjuster
	AFN.01924	Vite M 5x 16 Gambo Rettificato	M 5x 16 Rectifier Stem Screw
	AFS.02189	Tappino Leva Frizione	Clutch Lever Cap
14	FK0.02929	Leva Frizione 2012 C/Tappi	Clutch Lever 2012 W/Caps
15	FC0.01840	Piastrina Leva Cambio Crom.	Gear Lever Plate Chrom.
	FK0.01840	Piastrina Leva Cambio Crom.Comp	Gear Lever Plate Chrom.Com.

ES	COD	DESCRIZIONE	ITEMS
20	FK0.00268	Pedale Gas Puffo C/Tappo	Gas Pedal Puffo W/Cap
21	FK0.00270	Pedale Freno Puffo C/Tappo	Foot Brake Pedal Puffo W/Cap
22	FK0.01549	Pedale Gas NA Mini C/Tappo	Gas Pedal Mini NA W/Cap
23	FK0.01550	Pedale Freno NA Mini C/Tappo	Foot Brake Pedal Mini NA W/Cap
22	FK0.00076	Pedale Gas Std C/Tappo	Gas Pedal STD W/Cap
23	FK0.00083	Pedale Freno Std C/Tappo	Foot Brake Pedal Std W/Cap
22	FK0.00720	Pedale Gas 2002 C/Tappo	Gas Pedal 2002 W/Cap
23	FK0.00721	Pedale Freno 2002 C/Tappo	Foot Brake Pedal 2002 W/Cap
22	FK0.00868	Pedale Gas Ar. C/Tappo	Gas Pedal Back Position W/Cap
23	FK0.00869	Pedale Freno Ar. C/Tappo	Foot Brake Pedal Back PositionW/Cap
24	AFS.00082	Tappino Pedale Gas/Freno	Pedal Cap
25	FMN.1429D	Pedaliera Ar. DX c/viti	BACK Control Pedal RH Co
26	FMN.1429S	Pedaliera Ar. SX c/viti	Back Control Pedal LF Co
27	FM0.01587	Pedaliera Ar. CRG Mini Co	BackControl Pedal MINI CRG Co
28	SBN.00080	Perno Pedale Corto	Pedal Prisoner Short
29	SBN.00271	Perno Pedale Lungo	Pedal Prisoner Long
30	FZ0.00272	Molla Pedale Corta	Short Pedal Spring
31	FZ0.00085	Molla Pedale Lunga	Long Pedal Spring

1

2

3

4

5

6

7

8

9

10

11

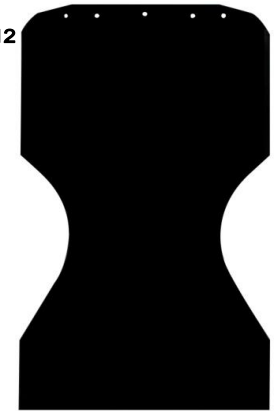
12

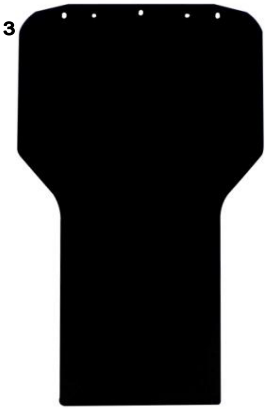
13

14

15

16

17

18

19

20

ES	COD	DESCRIZIONE	ITEMS
1	FV0.00054	Pianale Puffo	Floor Tray Puffo
2	FAN.00873	Pianale Baby NA Nero	Floor Tray Baby New Age Black
3	FAN.02423	Pianale Mini NA3 Nero	Mini NA3 Floor Tray
3	CRG.02423	Pianale Mini NA3 C/Adesivo CRG	Mini NA3 Floor Tray w/Sticker
4	FAN.00544	Pianale Mini NA Nero	Floor Tray Mini New Age Black
5	FAN.01565	Pianale Mini Junior Nero	Floor Tray Mini Junior Black
6	FAN.00716	Pianale Miniclass CRG Nero	Floor Tray Miniclass Black CRG
6	CRG.00716	Pianale Miniclass c/Adesivo CRG	Miniclass CRG Floor Tray w/Sticker
7	FAN.00680	Pianale Mini Hero Evo Nero	Hero Evo Floor Tray Black
7	CRG.00680	Pianale Mini Hero 1 c/Adesivo	Mini Hero 1 Floor Tray w/Sticker
8	FAN.02438	Pianale Mini Hero Nero	Mini Hero Floor Tray Black
8	CRG.02438	Pianale Mini Hero c/Adesivo CRG	Mini Hero Floor Tray w/Sticker
9	AML.02920	Pianale RR T Bianco (RS12-R10)	Floor Tray RR T White
9	FAN.02920	Pianale RR T RS12-R10 Nero	Floor Tray RR T Black
9	CRG.02920	Pianale RR T c/ Adesivo	Floor Tray RR T w/Sticker
10	AML.01507	Pianale Havana Bianco	Floor Tray Havana White
10	FAN.01507	Pianale Havana RR-BS-BB Nero	RR-BS-BB Havana Floor Tray Black
10	CRG.01507	Pianale Havana RR-BS-BB c/Adesivo	RR-BS-BB Havana Floor Tray w/Sti.
10	CRG.01508	Pianale BB-DD2 c/Adesivo 2012	BB-DD2 Floor Tray w/Sticker
11	FAN.00039	Pianale Road Rebel Nero	Floor Tray RR Black
12	FAN.00388	Pianale Kalifornia Nero	Floor Tray Kalifornia Black
12	CRG.00388	Pianale Kalifornia c/Adesivo	Floor Tray Kalifornia w/Sticker
13	FAN.00872	Pianale Black Hawk Nero	Floor Tray BH Black
14	CRG.01254	Pianale BS-KT1 c/Adesivo 2012	BS-KT1 Floor Tray w/Sticker
15	CRG.02905	Pianale Dark Knights 2012 c/Adesivo	Dark Knights Floor Tray w/Sticker
16	FAN.00882	Pianale Estensione XL Nero	Half-Floor Tray Black XL
17	AFS.00258	Gommino Pianale	Floor Tray Rubber
18	AFS.00245	Poggiapiedi Plastica	Plastic Feet Support
19	AFS.00386	Poggiapiedi a Culla	Footrest Cradle
20	FMG.02738	Poggiapiedi Regolabile Com. Oro	Adjustable Feet Support Com. Gold

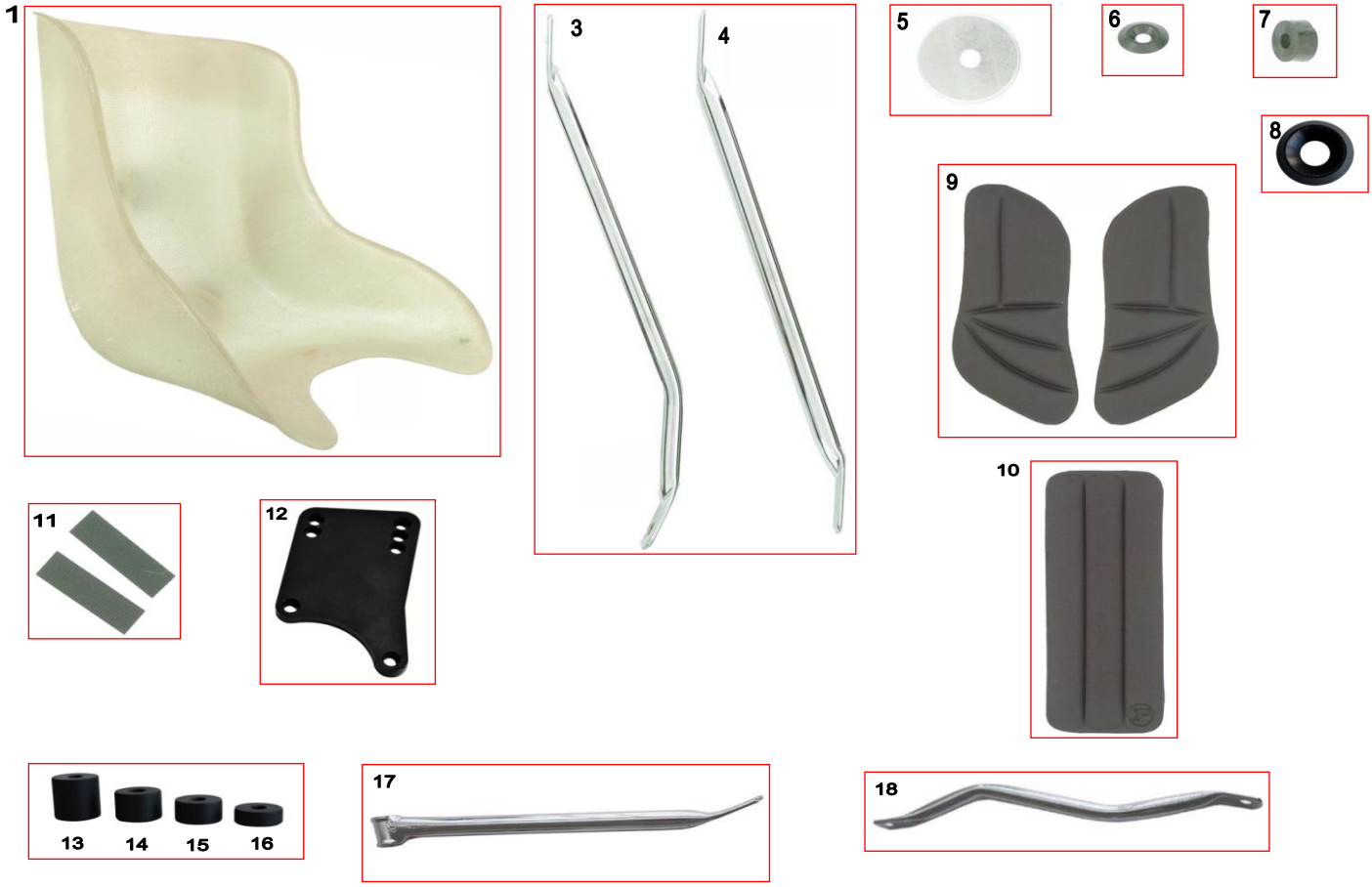

ES	COD	DESCRIZIONE	ITEMS
1	AFS.00166EV00	Sedile Resina CRG 23-23,5 Puffo	CRG Resin Seat 23-23,5 Puffo
1	AFS.00166EV01	Sedile Resina CRG 26-26,5 Mini	CRG Resin Seat 26-26,5 Mini
1	AFS.00166EV02	Sedile Resina CRG 27-27,5 Mini	CRG Resin Seat 27-27,5 Mini
1	AFS.00166EV03	Sedile Resina CRG 28-28,5 Mini	CRG Resin Seat 28-28,5 Mini
1	AFS.00166EV04	Sedile Resina CRG 28-29,5	CRG Resin Seat 28-29,5
1	AFS.00166EV05	Sedile Resina CRG 30-32	CRG Resin Seat 30-32
1	AFS.00166EV06	Sedile Resina CRG 32,5-33,5	CRG Resin Seat 32,5-33,5
1	AFS.00166EV07	Sedile Resina CRG 34-35,5	CRG Resin Seat 34-35,5
2	SL1.01111	Sedile Imbottito Logo CRG	CRG Logo Padded Seat
3	FC0.01389	Rinforzo Sedile Curvo 32	Curved Seat Support 32
4	FC0.01391	Rinforzo Sedile Diritto 28	Straight Seat Support 28
4	FC0.01392	Rinforzo Sedile Diritto 30	Straight Seat Support 30
4	FC0.01393	Rinforzo Sedile Diritto 32	Straight Seat Support 32
4	FC0.01394	Rinforzo Sedile Diritto 34	Straight Seat Support 34
5	SL1.00683	Rondella 8,5-60x2 Sedile	Seat Washer 8,5-60x2
6	FAN.00260	Rondella Sedile All.Nera	Alu Seat Washer Black
7	AFS.00259	Spessore Sedile in gomma	Seat Lining
8	SAN.00146	Rondella Svasata M 8 Nera	Washer M 8 Countersunk Black
9	AFS.01011	Spugna Sedile Laterale(2)	Side Seat Sponge (pairs)
10	AFS.01012	Spugna Sedile Dorsale	Dorsal Seat Sponge
11	AFS.01013	Velcro Spugna Sedile	Velcrum >>>Seat Sponge
12	SAN.02412	Piastra Rinf.Scatolato Ibr.010 Nr	Seat Support Reinf.Plate010
13	SL1.02023	Spessore Att.Sedile 8,5-30x30	Nylon Seat Lining 8,5-30x30
14	SL1.02024	Spessore Att.Sedile 8,5-30x20	Nylon Seat Lining 8,5-30x20
15	SL1.02025	Spessore Att.Sedile 8,5-30x15	Nylon Seat Lining 8,5-30x15
16	SL1.02026	Spessore Att.Sedile 8,5-30x10	Nylon Seat Lining 8,5-30x10
17	FC0.01879	Rinforzo Sedile DD2 DX 21	DD2 Seat Support RH Side 21
18	FC0.01006	Rinforzo Sedile MAX DX 21	MAX Seat Support RH Side 21

ES	COD	DESCRIZIONE	ITEMS
1	FL1.00211	Piatra Motore Puffo	Engine Mount Puffo
2	FFN.01359	Piastra Motore 25 CRG Mg.	Engine Mount Magn.25 CRG
2	FFN.01332	Piastra Motore 28 CRG Mg.	Engine Mount Magn.28 CRG
2	FFN.00899	Piastra Motore 30 CRG Mg.	Engine Mount Magn.30 CRG
2	FFN.00072	Piastra Motore 32 CRG Mg	Engine Mount Magn.32 CRG
3	FL1.00236	Cavallotto Motore Puffo	Engine Mount Bracket Puffo
4	FFN.01360	Cavallotto Motore 25 CRG Mg	Engine Mount Bracket Mg. CRG 25
4	FFN.01331	Cavallotto Motore 28 CRG Mg	Engine Mount Bracket Mg. CRG 28
4	FFN.00900	Cavallotto Motore 30 CRG Mg	Engine Mount Bracket Mg. CRG 30
4	FFN.00074	Cavallotto Motore 32 CRG Mg	Engine Mount Bracket Mg. CRG 32
5	AFN.00279	Vite M10x 40 Cilindrica	M10x 40 Socket Head Screw

RINFORZI E SUPPORTI / SUPPORTS & REIFORCEMENTS

ES	COD	DESCRIZIONE	ITEMS
1	FM0.02193	Culla Marmitta Mini Comp.	Exhaust Cradle Comp.Mini
	SZ0.00123	Culla Marmitta	Exhaust Cradle
	AFS.00088	Gommino Culla Marmitta	Exhaust Cradle Rubber
	SZ0.00122	Molla Culla Marmitta	Exhaust Cradle Spring
	AFN.00125	Rondella 10,5-30x2,5	Washer 10,5-30x2,5
	AFN.00127	Vite M 8x 55 Bombata	M 8x 55 Convex Head Screw
	AFN.00128	Dado M 8 Autobloccante Alto	Nut M 8 High Self-Locking
	AFN.00108	Rondella 8,5-18x2	Washer 8,5-18x2
	AFN.00266	Vite M 8x 40 Bombata	M 8x 40 Convex Head Screw
2	FM0.00121	Supporto Culla Marmitta 100 Co	Exhaust Cradle Supp.CO 100
3	FM0.01873	Supporto Culla Marmitta NA Cr.	Exhaust Cradle Chr.Support NA
4	AFS.01119	Tappino Supp. Culla Marmitta	Exhaust Cradle Support Cap
5	FAN.00983	Piastra Estensione Culla NERA	Exhaust Cradle Exten.Plate Bl.
6	SZ0.02223	Molla Silenziatore Scarico	Exhaust Manifold Spring

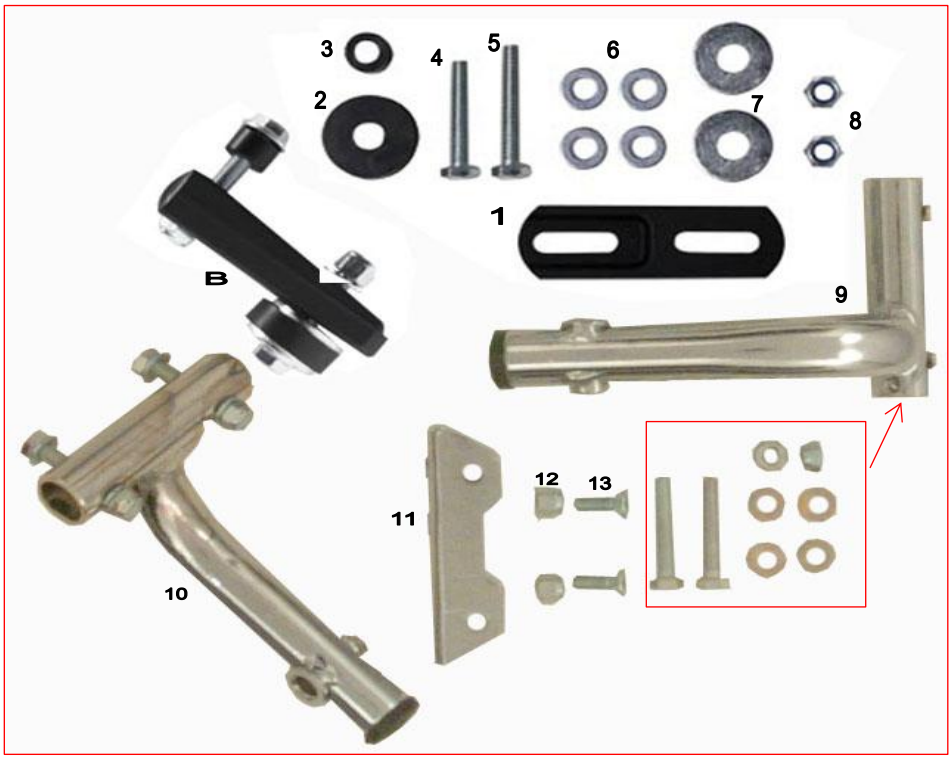

ES	COD	DESCRIZIONE	ITEMS
A	FM0.01824	Supporto Marmitta Rotax 08 Co	Exhaust Support Rotax08 Co
B	FK0.01555	Piastrina Sup.Marmitta Forgiata Rota	Forged Plate for Exhaust Supp.Rotax Com
1	SAN.01555	Piastrina Sup.Marmitta Forgiata Rota	Forged Plate for Exhaust Supp.Rotax
2	AFS.00088	Gommino Culla Marmitta	Exhaust Cradle Rubber
3	SAN.01477	Distanziale Supp.Marmitta Forgiato	Exhaust Sup.Rotax Spacer Black
4	AFN.00911	Vite M 8x 45 Esagonale	M 8x 45 Hexagonal Head Screw
5	AFN.00443	Vite M 8x 50 Esagonale	M 8x 50 Hexagonal Head Screw
6	AFN.00129	Rondella 8,5-17x1,5	Washer 8,5-17x1,5
7	AFN.00125	Rondella 10,5-30x2,5	Washer 10,5-30x2,5
8	AFN.00128	Dado M 8 Autobloccante Alto	Nut M 8 High Self-Locking
9	FM0.1824D	Supp.Marmitta 08 DX Tag lato mot.	Tag Exhaust Supp. 08 RH engine side
10	FM0.1824S	Supp.Marmitta 08 SX Tag lato freno	Tag Exhaust Supp.T 08 LF brake side
11	FK0.01823	Attacco Supporto Marmitta 08 Comp.	Exhaust Supp.Connection 08 Comp.
12	AFN.02138	Dado M 6 Alto	Nut M 6 High
13	AFN.01717	ViteM 6x 16 Svasata	M 6x 16 CountersunkHeadScrew
14	FZ0.00164	Sup. Paracatena 100-Mini Lungo	Chain Guard Support 100-Mini Long
14	FZ0.00327	Sup. Paracatena 125	Chain Guard Support 125
15	FZ0.00450	Sup. Paracatena Mini Corto	Chain Guard Support Mini Short

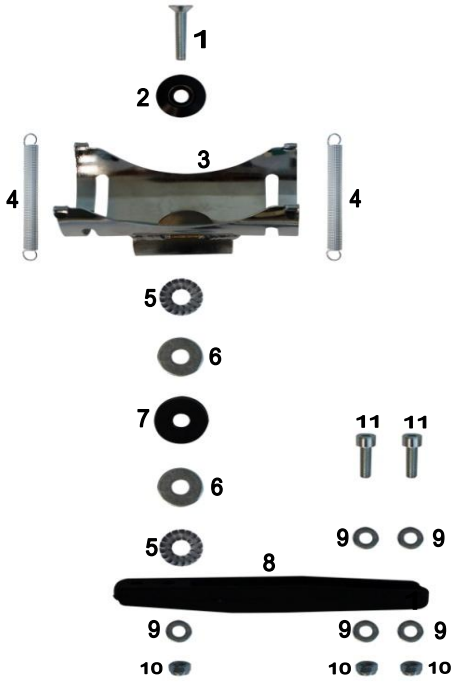

ES	COD	DESCRIZIONE	ITEMS
A	FM0.02890	Supporto Silenziatore 2011 KZ Com.	Exhaust Support 2011 KZ Complete
1	AFN.00291	Vite M 8x 45 Svasata	M 8x 45 Countersunk Head Screw
2	FAN.00260	Rondella 8 Sedile All. Nera	Alu Seat Washer 8 Black
3	SC0.02890	Culla Silenziatore 2011 D100 KZ	Exhaust Cradle 2011 D100 KZ
4	SZ0.00122	Molla Culla Marmitta 10,5 STD	Exhaust Cradle Spring 10,5 STD
5	AFN.00541	Rondella 10-26 Dentellata Int.Est	Cogwasher 10-26 Int.-Ext.
6	AFN.00125	Rondella 10,5-30x2,5	Washer 10,5-30x2,5
7	AFS.00088	Gommino Culla Marmitta	Exhaust Cradle Rubber
8	SAN.02857	Supporto Culla Silenziatore 2011	Exhaust Cradle Support Black 2011
9	AFN.00129	Rondella 8,5-17x1,5	Washer 8,5-17x1,5
10	AFN.00160	Dado M 8 Autobloccante Basso	Nut M 8 Low Self-Locking
11	AFN.00732	Vite M 8x 25 Cilindrica	M 8x 25 Socket Head Screw
12	SL1.02668	Piastra Protezione Silenziatore	Protection Plate for Silencer
13	AML.02933	Supporto Deviatore Gas Scarico	Exhaust Manifold Device Support

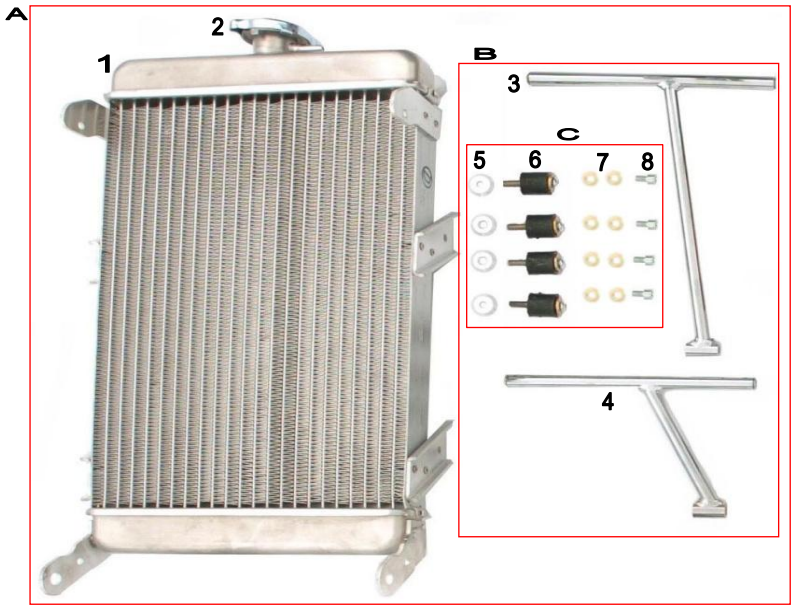

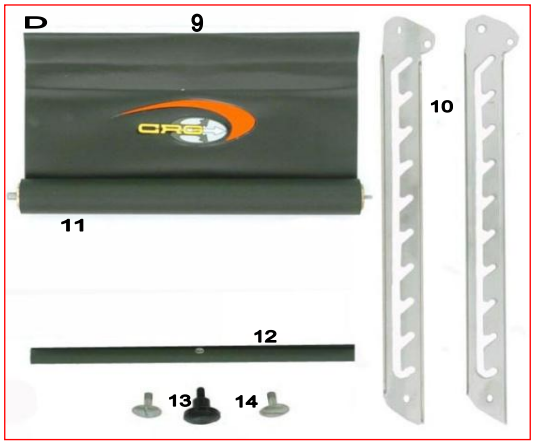

ES	COD	DESCRIZIONE	ITEMS
A	FM0.00785	Radiatore CRG Comp.C/Att.	Radiator CRG Compl.W/ Clamps
B	FK0.00787	Kit Attacchi Radiatore CRG KZ	Radiator Clamps CRG KZ
B	FK0.02597	Kit Attacchi Radiatore CRG KF	Radiator Clamps CRG KF
C	FK0.00760	Kit Silentblock Radiaotre	Radiator Silentblock Kit
1	AFS.00785	Radiatore CRG c/tappo	Radiator CRG w/cap
2	AFS.00756	Tappo Radiatore	Radiator Cap
3	SC0.00789	Sup. Radiatore CRG Lungo	CRG Radiator Support Long
4	SC0.00788	Sup. Radiaotre CRG Corto	CRG Radiator Support Short
5	SL1.01589	Distanziale 6 -20x 3,5	Spacer 6 -20x 3,5
6	AFS.00760	Gommino Radiatore	Radiator Silentblock
7	AFN.00105	Rondella 6,5-18x1,5	Washer 6,5-18x1,5
8	AFN.00016	Vite M 6x 14 Bombata	M 6 x 14 Convex Head Screw
D	FK0.01320	Tendina Radiatore CRG Comp.	Radiator Curtain CRG Comp.
9	AFS.01320	Tendina Radiatore CRG Nuda	Radiator Curtain CRG
10	AML.00987	Piastrina Tendina Rad(2)	Radiator Curtain Plate(2)
11	AFS.01329	Bussola Tendina Rad	Radiator Curtain Bushing
12	SAN.01322	Barretta Tendina Rad	Radiator Curtain Bar
13	SZ0.01323	Vite Esterna Tendina Rad	Radiator Curtain Screw
14	SAN.01321	Pomolo Tendina Rad	Radiator Curtain Pomme
15	SC0.02597	Sup. Radiatore Tag Corto	Tag Radiator Support Short
16	SC0.02598	Sup. Radiatore Curvo Inf.	Lower-Curved Radiator Supp.

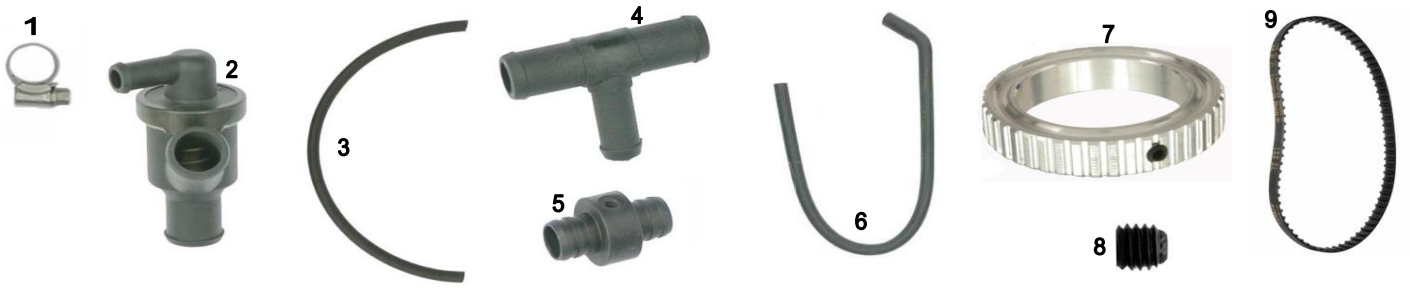

A

B

ES	COD	DESCRIZIONE	ITEMS
1	AFN.00776	Fascetta Acc. 16-25 Radiatore	Steel Band 16-25 Radiator
2	AFS.00986	Valvola Termostato	Thermic Valve
3	AMS.00784	Tubo Valvola Termostato	Thermic Valve Pipe
4	AFS.00723	Raccordo T Valvola Term.	Thermic Valve T Fitting
5	FAN.01130	Raccordo Sonda Crono Alfano	Fitting >>>Stopwatch Probe
6	AFS.00761	Tubo Acqua Curvo	Curved Water Pipe
7	FL1.01662	Puleggia Pompa Acqua STD 50	WaterPump Pulley STD 50
8	AFS.01672	Cinghiolo Pompa Acqua STD	Water Pump Driving Belt STD
9	AFN.00289	Grano M6x 6 STD	Grain M6x 6 STD
A	FM0.00762	Pompa Acqua Completa CRG09	Water Pump CRG09 Complete
	SAN.00763	Corpo Pompa Acqua Nero	Water Pump Body Black
	SAN.00764	Coperchio Pompa Acqua Nero	Water Pump Cover Black
	SL1.00767	Puleggia Pompa Acqua Dent.Piccola	Water Pump Pulley Small
	SAN.00768	Ventola Pompa Acqua Nera	Water Pump Fan Black
	AFN.00129	Rondella 8,5-17x1,5	WASHER 8,5-17x1,5
	AFN.00160	Dado M 8 Autobloccante Basso	Nut M 8 LowSelf-locking
	AFN.00772	OR Coperchio Pompa Acqua	Water Pump Cover O-Ring
	AFN.00105	Rondella 6,5-12x1,5	Washer 6,5-12x1,5
	AFN.00106	Dado M 6 Autobloccante Basso	Nut M 6 LowSelf-locking
	AFN.02058	Vite M 5x 10 Bombata	M 5x 10 Convex Head Screw
	AFN.00361	Rondella 5,5-15x1,5	Washer 5,5-15x1,5
	C90.2897352	Raccordo Pompa Acqua	Water Pump Fitting
	AFN.00154	Seeger D 22 Pompa Acqua	Seeger D 22 Water Pump
B	CRG.01614	Kit Revisione Pompa Acqua	Water Pumpp Overhaul Kit
	SL1.00765	Albero Pompa Acqua Inox	Water Pump Pivot Inox
	AFS.01619	Paraolio Pompa Acqua 10x22x7	Water Pump OIL Seal 10x22x7
	AFN.02250	Cuscinetto 608 Pompa Acqua	Water Pump 608 Bearing

1

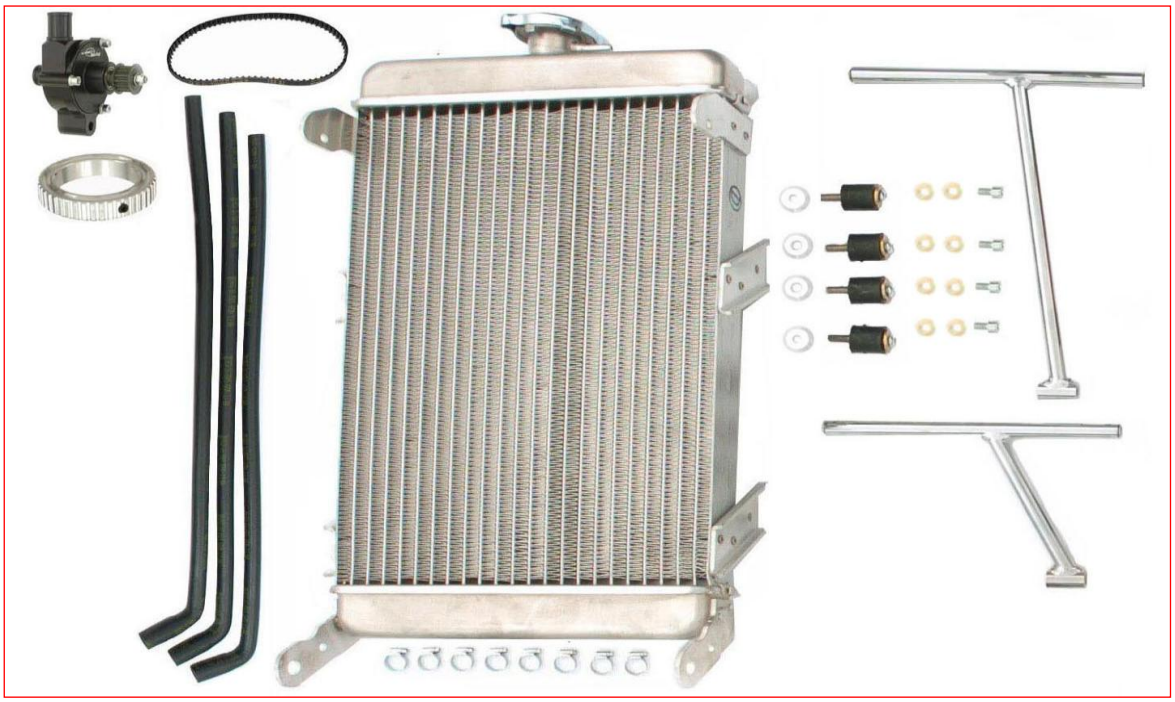

2

3

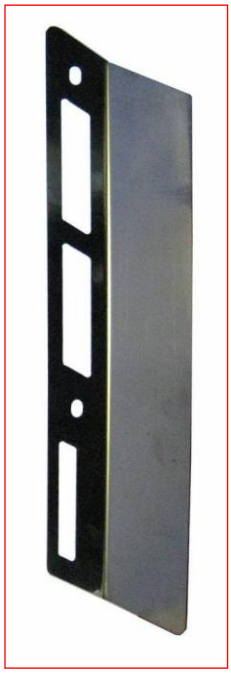

ES	COD	DESCRIZIONE	ITEMS
1	FK0.01818	Kit Raffredamento CRG STD	Cooling Kit CRG Standard
2	FM0.01991	Radiatore Pentagonale CRG Co	Pentagonal Radiator CRG Co
3	AML.01961	Riparo Radiatore	Radiator Protection Plate

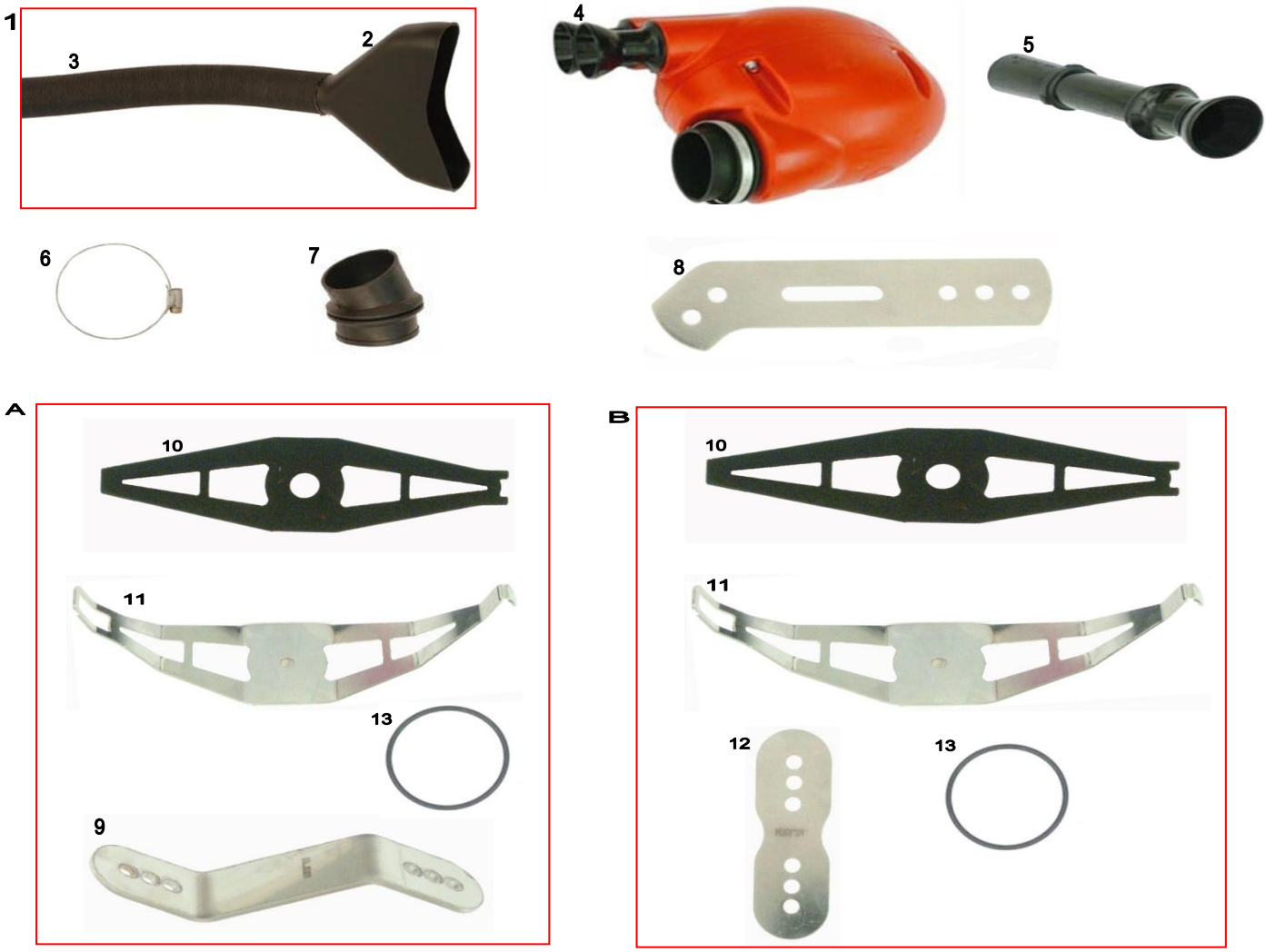

ES	COD	DESCRIZIONE	ITEMS
1	FM0.00988	Convogliatore Plastica Comp.	Plastic Brake Drafter Comp.
2	AFS.00988	Convogliatore Plastica	Brake Drafter Plastic
3	AMS.00989	Tubo Convogliatore	Brake Drafter Tube
4	AFS.00750	Filtro Aria Freeline B 23 R	Air Filter B23R Freeline
4	AFS.00781	Filtro Aria Freeline B 30 R	Air Filter B30R Freeline
5	AFS.00992	Condotto D'Aspirazione D23	FilterSleeve D23
5	AFS.01058	Condotto D'Aspirazione D30	Filter Sleeve D30
6	AFN.00955	Fascetta Acc. 60-80 Filtro	Steel Band 60-80 Air Filter
7	AFS.01002	Manicotto Filtro STD	Air Filter Rubber STD
8	SC0.01962	Supporto Filtro lame	lame Air Filter Support
A	FK0.01936	Kit Supporto Filtro KF	Filter Support Kit KF
B	FK0.01933	Kit Supporto Filtro KZ	Filter Support Kit KZ
9	AML.01936	Piastrina Supporto Filtro KF	KF Filter Support Plate
10	AFS.01935	Spugna Adesiva Supporto Filtro	Sticker Sponge For Filter
11	AML.01933	Supporto Filtro Aria	Air Filter Support
12	SC0.01934	Piastrina Supporto Filtro KZ	KZ Filter Support Plate
13	AFN.00248	Cinghiolo Pompa Acqua 2000	Water Pump Driving Belt 2000
14	AFN.00295	Vite M 6x 25 Svasata	M 6x 25 Countersunk Head Screw
15	SAN.00249	Rondella Svasata M 6 Nera	Washer M 6 Countersunk Black
16	AFN.00105	Rondella 6,5-12x1,5	Washer 6,5-12x1,5
17	AFN.00264	Dado M 6 Autobloccante Alto	Nut M 6 High Self-Locking

CORONE & CATENE / CHAINS & SPROCKETS

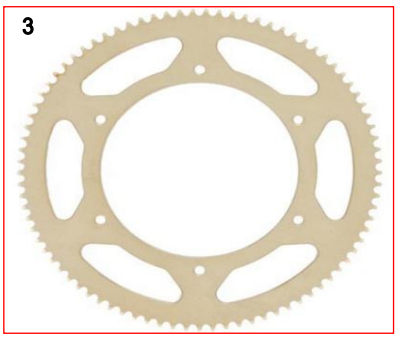

ES	COD	DESCRIZIONE	ITEMS
1	AFS.00614/102	Catena 100cc C/OR 102M	Chain 100cc with O-Ring 102
1	AFS.00614/104	Catena 100cc C/OR 104M	Chain 100cc with O-Ring 104
1	AFS.00614/106	Catena 100cc C/OR 106M	Chain 100cc with O-Ring 106
1	AFS.00614/108	Catena 100cc C/OR 108M	Chain 100cc with O-Ring 108
1	AFS.00614/110	Catena 100cc C/OR 110M	Chain 100cc with O-Ring 110
1	AFS.00614/112	Catena 100cc C/OR 112M	Chain 100cc with O-Ring 112
1	AFS.00614/114	Catena 100cc C/OR 114M	Chain 100cc with O-Ring 114
2	AMS.00671	Catena 125cc	Chain 125cc pro meter
2	AMS.00508	Catena Puffo (cm.89)	Chain Puffo (cm.89)
2	AMS.02651	Catena 100-Puffo Passo 219 (Al Mt)	Chain 100-Puffo Per Meter
3	AFS.00171**	Corona 100cc	Ring Gear100cc
		**misure da 76 a 86	** size from 76 to 86
4	AFS.00506	Corona Puffo	Ring Gear Puffo
5	AFS.00797**	Corona 125cc D50 Eegal	Ergal Ring Gear125cc D50
		**misure da 20 a 30	** size from 20 to 30
6	AMS.00779	Maglia Congiunzione 125	Junction Link 125
6	AMS.02652	Maglia Cong.100-Puffo Passo 219	Junction Link Chain Puffo 219
6	AFS.01121	Smagliacatena	CHAIN Linker Tool
7	AFS.01071	Cat (attr.catena 219-corona 4mm)	K-CAT (chain tool)
8	AFS.00338	Paracatena Dritto	CHAIN Guard > Straight
9	FMN.00298	Tendicatena Forgiato Nero Co	Chain Tightener Forged Black CO
10	AFS.00254	Vite Tendicatena M10 (Pom.Rosso)	Chain Tightener Screw M10 (Red Pommel)
11	SAN.00298	Tendicatena Forgiato Nero	Chain Tightener Forged Black

KIT RIPARA DISCO / DISC PROTECTION KIT

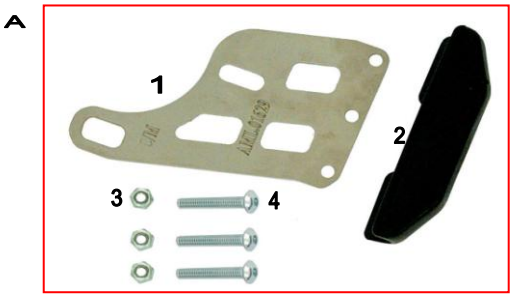

ES	COD	DESCRIZIONE	ITEMS
A	FK0.01632	Kit Ripara Disco CIK	Disc Support Kit Complete CIK
1	AML.01629	Supporto Salvadisco CRG	Disc Protection Support CRG
2	AFS.01632	Salva Disco CRG	Disc Protection Plate
3	AFN.00106	Dado M 6 Autobloccante Basso	Nut M 6 Low Self-locking
4	AFN.01984	Vite M 6x 35 Bombata	M 6x 35 Covex Head Screw

KIT RIPARA PARACATENA / CHAIN PROTECTION KIT

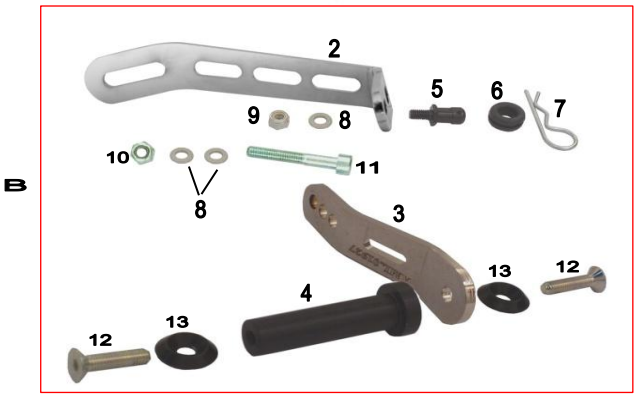

ES	COD	DESCRIZIONE	ITEMS
A	FK0.01926	Kit Caster Paracatena	Chain Guard Kit Complete
1	AFS.01926	Carter Paracatena 2008 Nero	Chain Guard 08
B	FK0.01928	Kit Attacchi Carter Paracatena	Chain Guard Clamps Kit
2	SC0.01928	Supporto Paracatena CRG	Chain Guard Support CRG
3	SC0.01927	Piastrina Attacco Paracatena08	Chain Guard 08 Connect.Plate
4	SAN.01965	Perno Paracatena 08	Chain Guard 2008 Pivot
C	FK0.01927	Kit Viti Att.Paracatena 08	Chain Guard Clamps Screws
5	SBN.00103	Perno Sup. Frontalino Nero	Front Fairing Pivot
6	AFS.00101	Gommino Supporto Frontalino	Front Fairing Rubber
7	SZ0.00102	Spina El.Supporto Frontalino	Front Fairing Elastic Pin
8	AFN.00105	Rondella 6,5-12x1,5	Washer 6,5-12x1,5
9	AFN.00106	Dado M 6 Autobloccante Basso	Nut M 6 LowSelf-locking
10	AFN.00264	Dado M 6 Autobloccante Alto	Nut M 6 High Self-Locking
11	AFN.00368	Vite M 6x 40 Cilindrica	M 6x 40 Socket Head Screw
12	AFN.00295	Vite M 6x 25 Svasata	M 6x 25 Countersunk Head Screw
13	SAN.00249	Rondella Svasata M 6 Nera	Washer M 6 Countersunk Black

KIT RIPARA PARACATENA MINI / CHAIN PROTECTION KIT MINI

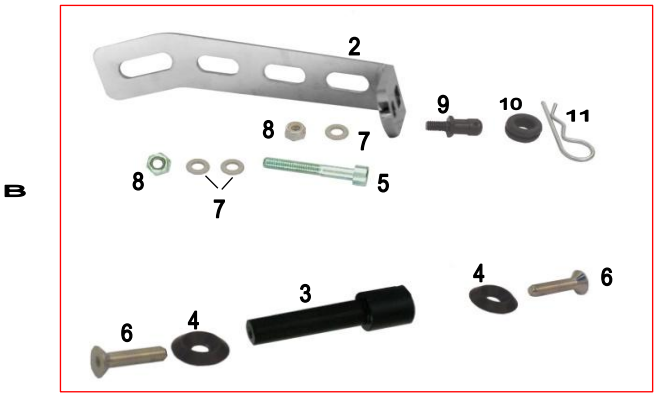

ES	COD	DESCRIZIONE	ITEMS
A	FK0.01926	Kit Caster Paracatena	Chain Guard Kit Complete
1	AFS.01926	Carter Paracatena 2008 Nero	Chain Guard 08
B	FK0.02799	Kit Attacco Paracatena Mini	Chain Guard Mini Kit
2	SC0.02441	Supporto Paracatena CRG Corto Min	Chain Guard CRG Supp.Short Mini
C	PMV.02799	Kit Viti Attacco Paracatena Mini	Chain Guard Mini Clamps Sup.Short
	SAN.02799	Perno Paracatena Mini	Chain Guard Mini Pivot
	SAN.00249	Rondella Svasata M 6 Nera	Washer M 6 Countersunk Black
	AFN.00281	Vite M 6x 30 Cilindrica	M 6x 30 Socket Head Screw
	AFN.01717	Vite M 6x 16 Svasata	M 6x 16 Countersunk Head Screw
	AFN.00105	Rondella 6,5-12x1,5	Washer 6,5-12x1,5
	AFN.00106	Dado M 6 Autoblock Basso	Nut M 6 Low Self-Locking
	SBN.00103	Perno Sup. Frontalino Nero	Front Fairing Pivot
	AFS.00101	Gommino Supporto Frontalino	Front Fairing Rubber
	SZ0.00102	Spina El.Supporto Frontalino	Front Fairing Elastic Pin

ES	COD	DESCRIZIONE	ITEMS
1	AFS.00969	Rotolo Nastro Adesivo CRG H.50	CRG Adhesive Tape H.50
1	AFS.02514	Rotolo Nastro Adesivo CRG H.75	CRG Adhesive Tape H.75
2	AFS.01094	Carrello Vert. Espositore	Vertical Stand w/wheels
3	AFS.01950	Carrello CRG Con Ruote	CRG Trolley w/wheels
4	AFS.01131	Attrezzo Spurgo	Dicharging Tool
5	AFS.01000	Xeramic Spray Multiuso	XeramicMulti Spray
6	AFS.00928	Kit Adesivi Protezione Trasp.	Sticker Kit Protection
7	AFS.01126	Smontagomme	Diassembly for tyres
8	AM5.01133	Piombo	Plomb
9	AFN.00967	Fascetta Plastica 200mm	Nylon Band 200mm
9	AFN.01385	Fascetta Plastica 290mm	Nylon Band 290mm
10	FL1.02251	Smontagomme New	Diassembly for tyres New

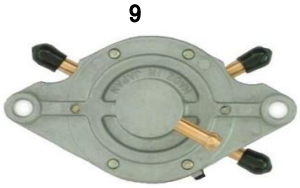

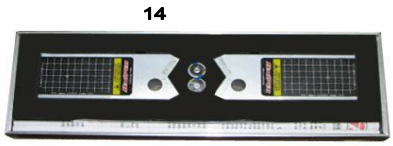

ES	COD	DESCRIZIONE	ITEMS
1	AFS.01386	Misurino Olio	Oil Vessel
2	AFS.01977	Xeramic Olio Evolution Castor	Xeramic Evolution Castor Oil
3	AFS.02221	Xeramic Olio Synmax Full Synthetic	Xeramic Synmax Full Synthetic Oil
4	AFS.01655	Xeramic Spray Catena Synthetic	Xeramic Synthetic Chain Spray
5	AFS.00999	Xeramic Spray Catena	Xeramic White Chain Spray
6	AFS.01009	Xeramic Pulitore Freni	Xeramic Brake Cleaner
7	AFS.01000	Xeramic Spray Multiuso	Xeramic Multi Spray
8	AFS.01855	Xeramic Istant Gasket	Xeramic Istant Gasket
9	AFS.00782	Pompa Depressione Benzina	Fuel Pump
10	AFS.01697	Sistema Aim MyChron STD Co.	Aim Chrono System Co
11	AFS.02777	Aim My-Chron 2t4 Lap Manetico	Aim My-Chron 2t4 Magnetic
12	AFS.00547	Cronometro Multifunzionale Aim	Multifunction Chrono Aim
13	AFS.01843	Sniper V2	Sniper V2
14	AFS.01975	Sniper V4	Sniper V4
15	AFS.02039	Sniper Kit Accessori V4	Sniper V4 Accessories Kit
16	AFS.02403	Carica Batteria Ey-Tech	Iintelligent Battery Manger
17	AFS.02404	Batteria 14.8V 4000mA Ey-Tech	Li-Po Battery 14.8V 4000mA E-T
18	AFS.02410	Contaore PET-3200R Ey-Tech	Pet-3200R Ey-Tech Hourmeter

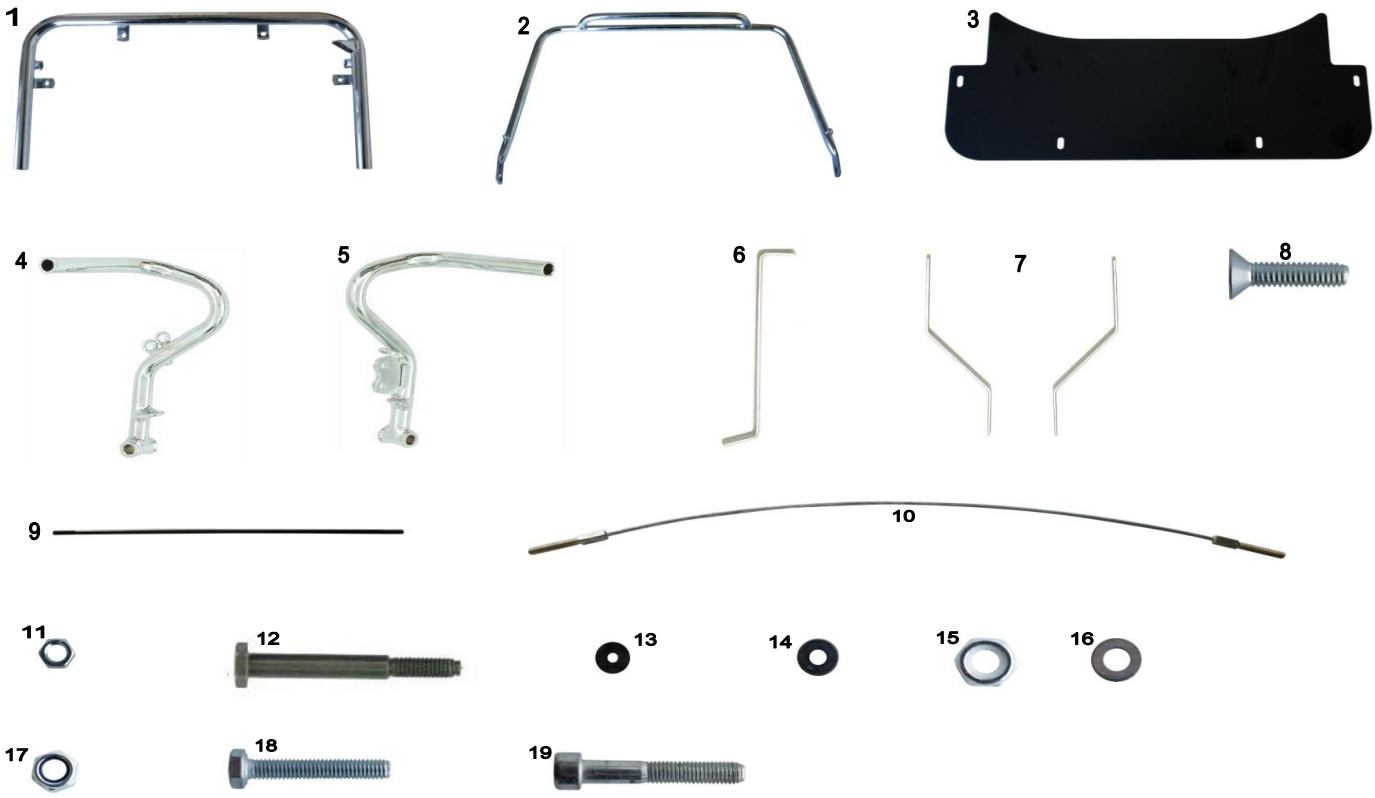

ES	COD	DESCRIZIONE	ITEMS
1	SC0.01134	Paraurti Anteriore Inf.XL	Front Bumper Bar Below XL
2	SC0.01652	Paraurti Anteriore Sup.XL NA2	Front Bumper Bar Top XL NA2
3	FAN.02256	Pianale Estensione 09	Extenrion Floor Tray 09
4	SC0.00868	Pedale Gas Arretrato C/Tappo	Gas Pedal Back Position W/Cap
5	SC0.00869	Pedale Freno Arretrato C/Tappo	Foot Brake Pedal Back Position W/Cap
6	SC0.01548	Supporto Frontalino Inf.NA/Inf.XL	Front Fairing Support Below NA/XL
7	SC0.02452	Supporto Frontalino Sup.NA2 XL	CRG Front Fairing Supp.Upper XL
8	AFN.00262	Vite M 6x 22 Svasata	M 6x 22 Countersunk Head Screw
9	SBN.00804	Asta Freno Nera Cm.55	Draw Pin Black Cm.55
10	AFS.00811	Cavo Sicurezza Cm.52	Safety Cable Cm.52
11	AFN.00093	Dado M 6	Nut M 6
12	SBN.00271	Perno Pedale Lungo	Pedal Pivot Long
13	AFS.00258	Gommino Pianale	Floor Tray Rubber
	SAN.00249	Rondella Svasata M 6 Nera	Washer M 6 Countersunk Black
14	AFN.00263	Rondella 6,5-18x1,6	Washer 6,5-18x1,6
15	AFN.00106	Dado M 6 Autobloccante Basso	Nut M 6 LOW Self-locking
16	AFN.00129	Rondella 8,5-17x1,5	Washer 8,5-17x1,5
17	AFN.00160	Dado M 8 Autobloccante Basso	NutM 8 Low Self-Locking
18	AFN.00283	Vite M 6x 35 Esagonale	M 6x 35 Hexagonal Head Screw
19	AFN.00368	Vite M 6x 40 Cilindrica	M 6x 40 Socket Head Screw

ES	COD	DESCRIZIONE	ITEMS
	FL1.00395	Assale 25 Puffo	Axle 25 Puffo
	FL1.02287	Assale 35 Puffo	Axle 35 Puffo
	FV0.00053	Avantreno Puffo	Forecarriage Puffo
	AFS.02249	Avviamento Puffo All. 23/28	Alu. Starter Puffo 23/28
	SAN.02469	Boccola Int.D21>D25 Carena P.Puffo	Int.Bushing D21>D25 Fairing Puffo
	SZ0.01937	Bussola Rullino Tendicatena Puffo	Chain Tight.Roller Bushing Puffo
	AFS.02425	Campana Frizione Honda GX35 Puffo	Honda GX35 Puffo Clutch Drum
	AFS.00522	Campana Frizione N38E Puffo	N38E Puffo Engine Clutch Drum
	AFS.00523	Candela Motore N38E Puffo	N38E Puffo Engine Spark Plug
	AFS.00524	Carburatore Dell'Orto Puffo	Puffo Dell'orto Carburettor
	AFS.00757	Carena Laterale New Age Mini/Puffo	New Age Side Fairing Mini/Puffo
	AFS.02426	Carter Campana Friz. Honda GX35	Honda GX35 Clutch Drum Carter
	AMS.00508	Catena Puffo N38E	Chain Puffo N38E
	AMS.02651	Catena 100-Puffo Passp 219 (al mt)	Chain 100-Puffo per Meter
	FL1.00236	Cavalotto Motore Puffo	Puffo Engine Mount Bracket
	AFS.01019	Chiavetta 8x5x50mm Puffo	Key 8x5x50mm Puffo
	AFS.00525	Cilindro Motore N38E Puffo	N38E Puffo Engine Cylinder
	AFS.00506	Corona Puffo	Ring Gear Puffo
	AFN.02206	Cusc. 6201 12x32x10 Honda GX35	Honda GX35 Bearing 6201 12x32x10
	SL1.00490	Disco Freno Puffo	Puffo Brake Disc
	AFS.00521	Frizione Motore N38E Puffo	N38E Puffo Engine Clutch
	AFS.00759	Frontalino New Age Mini/Puffo	New Age Front Fairing Mini/Puffo
	FM0.0071D	Fusello Puffo DX Completo	Stub Axle Puffo Right Compl.
	SC0.0071D	Fusello Puffo DX Cromato	Stub Axle Puffo Right Chrom.
	FM0.0071S	Fusello Puffo SX Completo	Stub Axle Puffo Left Compl.
	SC0.0071S	Fusello Puffo DX Cromato	Stub Axle Puffo Left Chrom.
	AFN.00498	Grano M8X35 Pinza Puffo	Grain M8x35 Puffo Brake Caliper
	FK0.00270	Kit Pedale Compl. Puffo Freno	Puffo Brake Pedal Compl. Kit
	FK0.00268	Kit Pedale Compl. Puffo Gas	Puffo Gas Pedal Compl. Kit
	FK0.0211825	Kit Sup.Carena P.KG Puffo C/Viti	Rear Plas.Bumper Clams Kit KG Puffo
	FKN.02469	Kit Vite Par.Post.Plast.D21>D25 Puffo	Rear Bumper KIT D21>D25 Puffo Comp.
	AMS.02286	Maglia Cong.Catena Puffo N38E	Junction Link Chain Puffo N38E
	AMS.02652	Maglia Cong.100-Puffo Passo 219	Junction Link Chain Puffo 219
	FZ0.00517	Molla Pinza Freno Puffo	Puffo Brake Spring
	CRG.00569	Mozzo Corona CRG 25 Puffo	Ring Carrier Puffo CRG 25 Black Compl.
	FMN.00569	Mozzo Corona Nero 25 Puffo Comp.	Ring Carrier Puffo 25 Black Compl.
	CRG.00585	Mozzo Disco Post. All. 25 Puffo CRG	Alu.Rear Brake Disc Hub 25 Puffo CRG
	FMN.00585	Mozzo Disco Post. All. 25 Puffo Com	Alu.Rear Brake Disc Hub 25 Puffo Com.
	AFS.00436	Paracapelli Puffo Plastica	Plastic Carter Puffo
	FV0.00411	Paracatena Puffo	Puffo Chain Guard

ES	COD	DESCRIZIONE	ITEMS
	SC0.00282	Paraurti Anteriore Puffo	Puffo Front Bumper
	SC0.0558D	Paraurti Laterale NA Puffo DX	Side Bumper New Age Puffo Right
	SC0.0558S	Paraurti Laterale NA Puffo SX	Side Bumper New Age Puffo Left
	FV0.00305	Paraurti Laterale Puffo Corto	Puffo Side Bumper Short
	FV0.00310	Paraurti Laterale Puffo Lungo	Puffo Side Bumper Long
	FV0.00318	Paraurto Posteriore Puffo	Puffo Rear Bumper
	AFS.00438	Pastiglia Freno Puffo	Brake Pad Puffo
	SC0.00270	Pedale Freno Puffo	Brake Pedal Puffo
	SC0.00268	Pedale Gas Puffo	Gas Pedal Puffo
	FVN.01783	Pedaliera Puffo	Puffo Foot Pedal Support
	FBN.01086	Perno Pinza Puffo	Caliper Pivot Puffo
	FV0.00054	Pianale Puffo	Puffo Floor Tray
	FC0.00060	Piantone Sterzo Puffo	Steering Wheel Column Puffo
	SZ0.02631	Piastra Interrutore Puffo	Puffo Switch Plate
	FL1.00211	Piastra Motore Puffo	Puffo Engine Mount
	FL1.02521	Piastra Motore Puffo All.Comer	Puffo Comer Engine Mount
	FAN.00211	Piastra Motore Puffo All.Nera	Puffo Alu.Engine Mount Black
	SZ0.02191	Piastrina Tendicatena Honda GX35	Chain Tightener Plate Honda GX35
	AFS.02234	Pignone Puffo Honda GX35 Z 8	Honda GX35 Puffo Pinion 8 T
	AFS.00528	Pignone Puffo N38E Z 8	N38E Puffo Pinion 8 T
	FM0.00458	Pinza Freno Puffo Completa	Rear Brake Caliper Compl.Puffo
	SL1.00454	Pistoncino Pinza Puffo	Puffo Caliper Piston
	AFS.00526	Pistone Motore N38E Puffo	N38E Puffo Engine Piston
	AFS.02575	Pneumatico VG Ant. Puffo	VG Front Tyre Puffo
	AFS.02576	Pneumatico VG Post. Puffo	VG Rear Tyre Puffo
	CRG.00048	Puffo Kart Completo MotoreN38E	Puffo Kart N38E Engine Package
	AFS.02278	Pulsante Massa Puffo	Puffo Off Button
	FL1.00509	Rullino Tendicatena Puffo	Tightener Roller Puffo
	FV0.00048	Scocca Puffo	Puffo Frame
	AFS.00166EV00	Sedile Resina CRG 23-23,5 Puffo	Resin Seat CRG 23-23,5 Puffo
	AFN.02205	Seeger D12 Est.Frizione Honda GX35	Est..Seeger D32 Honda GX35 Clutch
	AFN.00973	Seeger D32 Int.Frizione Honda GX35	Int.Seeger D32 Honda GX35 Clutch
	SL1.0538D	Semi Pinza Puffo DX	Half Caliper Puffo Right
	SL1.0538S	Semi Pinza Puffo SX	Half Caliper Puffo Left
	SL1.02406	Spessore 5-12x19 Mot. Puffo	Spacer For Puffo Engine 5-12x19
	SL1.02405	Spessore 5-16x27 Mot. Puffo	Spacer For Puffo Engine 5-16x27
	SL1.02407	Spessore 6-16x20 Tend. Puffo	Spacer For Puffo Chain 6-16x20
	AFS.00758	Spoiler New Age Mini/Puffo	New Age Spoiler Mini/Puffo
	FV0.00317	Supporto Frontalino Puffo	Puffo Front Fairing Support
	FZ0.02643	Supporto Paracapelli SX Puffo New	Puffo New Carter Support LF
	SBN.00467	Svitone Pinza Puffo	Puffo Brake Caliper Unscrew
	FBN.01197	Vite Fusello Puffo Nera	Stub Axle Bolt Puffo Black
	AFS.00537	Volante Puffo	Puffo Steering Whee

ES	COD	DESCRIZIONE	ITEMS
	AFS.01314	Set Pneumatici BS YLA	Tyres Set BS YLA
	CRG.01259	Set Pneumatici BS YLB	Tyres Set BS YLB
	CRG.01257	Set Pneumatici BS YLC.	Tyres Set BS YLC
	CRG.01263	Set Pneumatici BS YLM	Tyres Set BS YLM
	CRG.01256	Set Pneumatici BS YKP CIK Rain	Tyres Set BS YKP CIK Rain
	CRG.02314	Set Pneumatici BS YFS Rental	Tyres Set BS YFS Rental
	CRG.02315	Set Pneumatici BS YBN Rental	Tyres Set BS YBN Rental
	CRG.01665	Set Pneumatici DN DEM 165	Tyres Set DN DEM 165
	CRG.01271	Set Pneumatici DN Rain KT13 WI2	Tyres Set DN Rain KT13 WI2
	AFS.01275	Pneumatico VG CA 10x4,00-5	Tyre VG CA 10x4,00-5
	AFS.01279	Pneumatico VG CA 11x5,00-5	Tyre VG CA 11x5,00-5
	AFS.01780	Pneumatico VG SL3 10x4,60-5	Tyre VG SL3 10x4,60-5
	AFS.01781	Pneumatico VG SL3 11x7,10-5	Tyre VG SL3 11x7,10-5
	AFS.01577	Pneumatico VG SL6 10x4,60-5	Tyre VG SL6 10x4,60-5
	AFS.01578	Pneumatico VG SL6 11x7,10-5	Tyre VG SL6 11x7,10-5
	AFS.02272	Pneumatico VG XH 10x4,60-5	Tyre VG XH 10x4,60-5
	AFS.02313	Pneumatico VG XH 11x7,10-5	Tyre VG XH 11x7,10-5
	AFS.01276	Pneumatico VG XM 10x4,60-5	Tyre VG XM 10x4,60-5
	AFS.01281	Pneumatico VG XM 11x7,10-5	Tyre VG XM 11x7,10-5
	AFS.01278	Pneumatico VG XP 10x4,60-5	Tyre VG XP 10x4,60-5
	AFS.01282	Pneumatico VG XP 11x7,10-5	Tyre VG XP 11x7,10-5
	AFS.01264	Pneumatico VG WE 40 10x4,00-5	Tyre VG WE 40 10x4,00-5
	AFS.01269	Pneumatico VG WE 50 11x5,00-5	Tyre VG WE 50 11x5,00-5
	AFS.00713	Pneumatico VG W5 10x4,20-5	Tyre VG W5 10x4,20-5
	AFS.01135	Pneumatico VG W5 11x6,00-5	Tyre VG W5 11x6,00-5

PNEUMATICO E MOTORI / TYRES AND ENGINES

ES	COD	DESCRIZIONE	ITEMS
	FC0.02475	Supporto Pulsantiera KF	Console Support KF
	FC0.00793	Supporto Pulsantiera Rotax	Console Support Rotax
	AFS.02443	Motore Maxter XF1 2011	Maxter XF1 2011 Engine
	AFS.02444	Motore Maxter XF2 2011	Maxter XF2 2011 Engine
	AFS.01301	Motore Maxter XF3 2011	Maxter XF3 2011 Engine
	AFS.01302	Motore Maxter MXO	Maxter MXO Engine
	AFS.01851	Motore Maxter MXV	Maxter MXV Engine
	AFS.01593	Motore Maxterino 50 c/marm	Maxterino 50 Engine
	AFS.01422	Motore Rotax FR 125 Junior Max	Rotax FR 125 Junior Max Engine
	AFS.00795	Motore Rotax FR 125 MAX	Rotax FR 125 MAX Engine
	AFS.01634	Motore Rotax DD2	Rotax DD2 Engine
	AFS.01303	Motore Vortex ROK 125 TaG	Rok 125 TaG engine*w/mount co
	AFS.00710	Motore Vortex Super ROK 125	Super Rok 125 engine comp.

1

2

1

2

3

4

5

6

7

ES	COD	DESCRIZIONE	ITEMS
1	AAC.30089	T-Shirt CRG Flou Arancio Nera	T-Shirt Black CRG Orange
2	AAC.30093	T-Shirt CRG Flou Arancio Bianca	T-Shirt White CRG Orange
3	AAC.30158	T-shirt CRG Tricolore Nera	T-shirt Italy Flag CRG Black
4	AAC.30143	T-Shirt Bianca CRG-Flou	T-Shirt White CRG-Flou
5	AAC.30142	T-Shirt Nera CRG-Flou	T-Shirt Black CRG-Flou
	AAC.30144	T-Shirt Junior CRG-Flou	T-Shirt Junior CRG-Flou
6	AAC.30129	Polo M/M CRG	Polo Shirt S/S CRG
7	AAC.30122	Polo M/L CRG	Polo Shirt L/S CRG

8

9

10

11

12

13

ES	COD	DESCRIZIONE	ITEMS
8	AAC.30121	Camicia M/L CRG	Shirt L/S CRG
9	AAC.30128	Camicia M/M CRG	Shirt S/S CRG
10	AAC.30134	Felpa CRG Nera Bimbo	CRG Sweat Shirt Black Child
11	AAC.30170	Felpa Bimbo con zip	Sweat Shirt Zip Child
12	AAC.30017	Felpa Cappuccio CRG	Sweat Shirt w/hood
13	AAC.30096	Felpa CRG Nera C/ZIP Winter	Winter Sweat Shirt CRG W/Zip

14

15

16

17

18

19

20

21

22

ES	COD	DESCRIZIONE	ITEMS
14	AAC.30159	Felpa Tricolore CRG	Sweat Shirt Italy Flag CRG
15	AAC.30146	Felpa Tricolore New	Sweat Shirt Italy Flag CRG new
16	AAC.30119	Felpa Summer CRG	Sweat Shirt Summer CRG
17	AAC.30118	Pile CRG	Pile CRG
18	AAC.30137	Giubbino Hydro CRG Nero	Hydro Jacket CRG Black
19	AAC.30116	Bomber Winter CRG	Bomber Winter CRG
20	AAC.30169	Bomber CRG Fluo	Bomber CRG Fluo
21	AAC.30117	Giacca Light CRG	Light Jacket CRG
22	AAC.30120	Gilet CRG	Gilet CRG

23

24

25

26

27

28

ES	COD	DESCRIZIONE	ITEMS
23	AAC.30167	Pantalone CRG	CRG Trousers
24	AAC.30126	Bermuda CRG Old	Bermuda CRG old
25	AAC.30001	Bermuda CRG	Bermuda CRG
26	AAC.30125	Pantalone Summer CRG	Summer Trousers CRG
27	AAC.30153	Pantalone CRG C/Zip	CRG Trousers W/Zip
28	AAC.30124	Pantalone Winter CRG	Winter Trousers CRG

29

30

31

32

33

34

35

ES	COD	DESCRIZIONE	ITEMS
29	AAC.30127	Cappellino CRG	Cap CRG
30	AAC.30163	Cappillino 25th Anni. CRG	Cap CRG 25th Anniversary CRG
31	AAC.30002	Berretta Lana CRG	Wind Wool Cap CRG
32	AAC.30038	Paraorecchie CRG	Head Warmer CRG
33	AAC.30053	Sciarpa CRG	Scarf CRG
34	AEP.30032	Ombrello	Umbrella
35	AEC.30067	Zaino	Bag CRG

36

37

38

39

ES	COD	DESCRIZIONE	ITEMS
36	AAP.30150	Tuta Kart CRG Lico 2010	Racing Suit CRG Lico 2010
37	AAC.30400	Tuta Kart CRG 2012	Racing Suit CRG 2012
38	AAP.30109	Sottotuta Invernale	Underwear Overall Thermic
39	AAP.30102	Sottotuta Sun Dry CRG	Underwear Sun Dry CRG

40

41

42

43

44

45

46

ES	COD	DESCRIZIONE	ITEMS
40	AAP.30101	Protezione Torace Bengio	Bencio Thorax Protection
41	AAP.30086	Tuta Pioggia CRG	CRG Rain Vest
42	AAP.30098	Copriscarpe Pioggia CRG Lico	Kart Shoes Cover CRG Lico
43	AAP.30132	Guanti CRG Lico	Gloves CRG Lico
44	AAP.30158	Guanti CRG Neri Corti	Kart Glovers CRG Black Short
45	AAP.30163	Guanti CRG Neri Lunghi	Kart Glovers CRG Black Long
46	AAC.30106	Guanti di Lana	Wool Glovers

47

48

49

50

51

52

ES	COD	DESCRIZIONE	ITEMS
47	AAP.30099	Sottocasco CRG	Under-Helpmet CRG
48	AAP.30036	Paracollo	Neck Protection
49	AAP.30133	Scarpe CRG Lico	Shoes CRG Lico
50	AEC.30009	Borsa Trolley CRG 09	Trolley Bag CRG 09
51	AEP.30154	Telo Asciugamano CRG Nero	CRG Black Towel
52	AEP.30014	Coprikart CRG Nero	CRG Black Kart Cover

ES	COD	DESCRIZIONE	ITEMS
53	AAC.30138	Felpa Diamond CRG C/Zip	CRG Diamond Sweat Shirt Zip
54	AAC.30139	Felpa Diamond CRG	CRG Diamond Sweat Shirt
55	AAC.30140	Giubbino Hydro Diamond CRG	CRG Diamond Hydro Jacket
56	AAC.30141	Polo Diamond CRG 3/4	CRG Diamond Polo Shirt 3/4
57	AAC.30164	Cappellino I love CRG	Cap I love CRG
58	AAC.30162	Bomber Donna CRG	Bomber Woman CRG
59	AAC.30166	T-shirt CRG Donna Bianca	T-shirt White CRG Woman
60	AAC.30165	T-shirt CRG Donna Nera	T-shirt Black CRG Woman
61	AAC.30161	Felpa Fluo Donna	Sweat Shirt Fluo Woman CRG
62	AAC.30200	Canotta CRG Woman Bianca	Top White CRG Woman
63	AAC.30201	Canotta CRG Woman Bianca	Top White CRG Woman

C.R.G SPA - Via Mantova 4/f - 25017 Lonato del Garda (BS)

P.I/C.F. 08586340013 - Tel +39 030 9912604 - Fax +39 030 9912961 Capitale sociale € 510.000,00 i.v.

SOCIETA' SOGGETTA A DIREZIONE E COORDINAMENTO DA PARTE DELLA SOCIETA' TININI GROUP SRL (ai sensi art.2497bis C.C)