CATALOGO *CATALOGUE*

GIUGNO *JUNE*

2017

Gentili Clienti,
Vi preghiamo di prendere visione degli aggiornamenti a seguire, tali aggiornamenti nel listino sono evidenziati in **grassetto** per una migliore consultazione.

Pag.19	aggiunto FVN.03902 - FVN.03905
Pag.20	sostituito AFN.02545 con AFN.00732
Pag.33	sostituito FMG.02951 con FMG.03321
Pag.33	sostituito FMG.02940 con FMG.03322
Pag.33	sostituito FMG.02939 con FMG.03323
Pag.33	sostituito FMG.02886 con FMG.03324
Pag.82	sostituito FMN.00849 con FMN.04160
Pag.83	aggiunto AFS.04155
Pag.100	sostituito FZ0.00327 con FZ0.03742
Pag.121	aggiunto AAP.3065 - AAP.3090

*Nelle descrizioni, tutte le categorie **KF** diventano **DD** (Direct Drive) mentre i **KFJ** diventano **OKJ**.*
Grazie per la vostra attenzione.

Dear Customers,
please have a look at the updates as follow, such updates are in **bold** on the price list for an easier consultation.

Pag.19	added FVN.03902 - FVN.03905
Pag.20	replaced AFN.02545 whit AFN.00732
Pag.33	replaced FMG.02951 whit FMG.03321
Pag.33	replaced FMG.02940 whit FMG.03322
Pag.33	replaced FMG.02939 whit FMG.03323
Pag.33	replaced FMG.02886 whit FMG.03324
Pag.82	replaced FMN.00849 whit FMN.04160
Pag.83	added AFS.04155
Pag.100	replaced FZ0.00327 whit FZ0.03742
Pag.121	added AAP.3065 - AAP.3090

*In the descriptions, all the **KF** categories became **DD** (Direct Drive) while the **KFJ** category became **OKJ**.*
Thank you for your attention.

LA CRG SI RISERVA DI MODIFICARE LE CARATTERISTICHE TECNICHE
IN QUALSIASI MOMENTO E SENZA PREAVVISO.

LA CRG NON SI RITIENE RESPONSABILE DI EVENTUALI DIFFERENZE FRA LE
INFORMAZIONI CONTENUTE NEL CATALOGO ED I PRODOTTI ATTUALI.

CRG RESERVES THE RIGHT TO MODIFY THE TECHNICAL CHARACTERISTICS
UPON DISCRETION.

CRG WILL NOT BE HELD RESPONSIBLE FOR EVENTUAL VARIATIONS REGARDING
THE CONTENTS OF THE CURRENT PRICE CATALOGUE AND ACTUAL PRODUCTS.

INDICE

ABBIGLIAMENTO ..... PAG. 111
ACCESSORI PARAURTI POSTERIORI ..... PAG. 27
ACCESSORI TANICA ..... PAG. 30
ARTICOLI PUFFO ..... PAG. 105 - 106
ARTICOLI XL ..... PAG. 105
ASSALI ..... PAG. 31
BARRETTE STERZO ..... PAG. 74
CARENA POSTERIORE KG ..... PAG. 26
CARENA POSTERIORE MINI ..... PAG. 25
CARROZZERIE NA2 ..... PAG. 21 - 22
CARROZZERIE NEW AGE ..... PAG. 23 - 24
CERCHI ..... PAG. 80
CORONE & CATENE ..... PAG. 100
FILTRI ..... PAG. 99
FLANGE ..... PAG. 32 - 35
FUSELLI ..... PAG. 75 - 79
IMPIANTI FRENANTI ..... PAG. 36 - 53
KIT ADESIVI ..... PAG. 28 - 29
KIT PARACATENA ..... PAG. 101
KIT PRONTO GARA ..... PAG. 107 - 110
KIT RIPARA DISCO ..... PAG. 100
LEVE & COMANDI ..... PAG. 87
MOZZI ..... PAG. 81 - 85
PEDALI ..... PAG. 88
PIANALE ..... PAG. 89 - 90
PIASTRA MOTORE ..... PAG. 92
PINZA ..... PAG. 54 - 66
POMPA FRENI ..... PAG. 67 - 70
RACCORDI ..... PAG. 71
RADIATORE ..... PAG. 96 - 97
RICAMBI PISTA MANUNTEZIONE ..... PAG. 103 - 104
RIPARTITORE DI FRENATA ..... PAG. 72
SCOCCHE ..... PAG. 18 - 19
SEDILI ..... PAG. 91
SISTEMI DI TELEMETRIA STARLANE ..... PAG. 102
STABILIZZATORE ..... PAG. 20
SUPPORTI ..... PAG. 92 - 95
TELAI ..... PAG. 6 - 17
TIRANTI FRENO ..... PAG. 73
VARIE RAFFREDDAMENTO ..... PAG. 98
VOLANTI & PIANTONI ..... PAG. 86

COLORI IMPIANTI

P PUFFO	DD V05	KZ V08	DD V09
M MINI	KZ V05	DD V08	KZ V09
DD V04	0KJ V08	0KJ V09	DD V10

INDEX

BODYWORK NA2 ..... PAG. 21 - 22
BODYWORK NEW AGE ..... PAG. 23 - 24
BRAKE EQUALIZER ..... PAG. 72
BRAKE RODS ..... PAG. 73
BRAKE SYSTEMS ..... PAG. 36 - 53
CALIPER ..... PAG. 55 - 67
CHAIN & SPROCKETS ..... PAG. 100
CHAIN PROTECTION KIT ..... PAG. 101
CHASSIS ..... PAG. 6 - 17
CLOTHING LINE ..... PAG. 111
CONTROL & LEVERS ..... PAG. 87
DISC PROTECTION KIT ..... PAG. 100
ENGINE MOUNT ..... PAG. 92
FILTERS ..... PAG. 99
FITTINGS ..... PAG. 71
FLANGES ..... PAG. 32 - 35
FLOOR TRAY ..... PAG. 89 - 90
FRAMES ..... PAG. 18 - 19
FUEL TANK ACCESSORIES ..... PAG. 30
HUBS ..... PAG. 81 - 85
MASTER CYLINDER ..... PAG. 65 - 68
PEDALS ..... PAG. 88
PUFFO ITEMS ..... PAG. 105 - 106
RADIATOR ..... PAG. 96 - 97
READY TO RACE KIT ..... PAG. 107 - 110
REAR AXLES ..... PAG. 31
REAR BUMPER ACCESSORIES ..... PAG. 27
REAR BUMPER KG ..... PAG. 26
REAR BUMPER MINI ..... PAG. 25
RIMS ..... PAG. 80
SEATS ..... PAG. 91
STARLANE TELEMETRY SYSTEM ..... PAG. 102
STEERING WHEELS & COLUMNS ..... PAG. 86
STICKERS KIT ..... PAG. 28 - 29
STUB AXLES ..... PAG. 75 - 79
SUPPORTS ..... PAG. 92 - 95
TORSION BAR ..... PAG. 20
TOOLS & TRACK MAINTENANCE ..... PAG. 103 - 104
TRACK RODS ..... PAG. 74
VARIOUS COOLING SYSTEM ITEMS ..... PAG. 98
XL ITEMS ..... PAG. 105

BRAKE SYSTEM COLORS

P	PUFFO	DD	V05	KZ	V08	DD	V09
M	MINI	KZ	V05	DD	V08	KZ	V09
DD	V04	OKJ	V08	OKJ	V09	DD	V10

MODELLO - MODEL	CATEGORIA CATEGORY	VERSIONE VERSION	FRENO BRAKE	ASSALE AXLE
BLACK STAR				
CRG.20048 (vers. Bahrein)	OK - OKJ	Racing	V09/189MG	Ø 50x2
CRG.20050 (vers. Bahrein)	Rotax	Racing	V09/189MG	Ø 50x2
CRG.20053 (vers. Bahrein)	DD	Racing	V10/189 G-MG	Ø 50x2

Il telaio Black Star adotta una scocca con tubi di acciaio cromo molibdeno con ø30mm per quanto riguarda i longheroni, mentre per le traverse queste sono di ø32mm. Nuovi gli scatolati portacuscinetti con rinforzo sul lato freno.
Sui telai Black Star è possibile regolare sia l'altezza da terra dell'assale posteriore che quella dei fuselli anteriori, inoltre sull'anteriore è possibile registrare camber e caster molto facilmente grazie all'esclusivo sistema Sniper. Su tutta la gamma Racing viene montato il sistema frenante Ven 05, Ven 09 o Ven 10 a seconda del modello di telaio scelto, oltre alla possibilità di scegliere fra i dischi in ghisa o quelli in duralcan.
Il telaio viene fornito completo di carenature New Age 02 e da quella posteriore KG oltre al kit adesivi.

The Black Star chassis has a frame with ø30 Chrome moli tubes on the long chassis rail and the cross bars ø32 tubes, the new bearing hanger reinforced on the brake side. On the Black Star chassis it is possible to adjust the rear axle and the stub axle settings; on the front side it is easy to set up the caster camber by the exclusive Sniper caster system. All the racing range is supplied with the Ven 05,Ven 09 or Ven 10 brake system depending on the specified category.
These brake systems are available with iron or with a ceramic discs.
The chassis is supplied with the plastic bodywork New Age 02, the rear KG and the sticker kit.

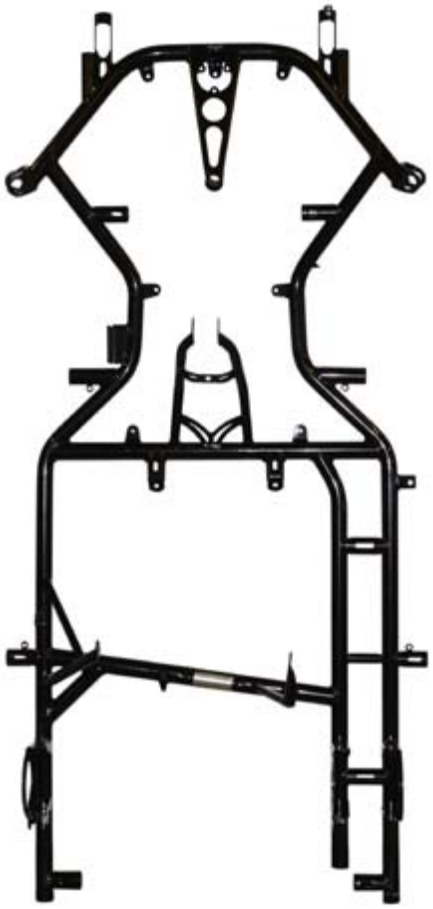

MODELLO - MODEL	CATEGORIA CATEGORY	VERSIONE VERSION	FRENO BRAKE	ASSALE AXLE
ROAD REBEL				
CRG.20042	KZ	Racing	Ven 09/189 MG	Ø 50x2
CRG.10023	KZ	Racing	Ven 09/189 dural/MG	Ø 50x2

Il telaio Road Rebel adotta una scocca con tubi di acciaio cromo molibdeno con ø 32mm con i nuovi scatolati portacuscinetti con rinforzo sul lato freno. Sui telai Road Rebel è possibile regolare sia l'altezza da terra dell'assale posteriore che quella dei fuselli anteriori; inoltre sull'anteriore è possibile registrare camber e caster molto facilmente grazie all'esclusivo sistema Sniper. Su tutta la gamma Racing viene montato il sistema frenante Ven 05, Ven 09 o Ven 10 a seconda del modello di telaio scelto oltre alla possibilità di scegliere fra i dischi in ghisa o quelli in duralcan.
Il telaio viene fornito completo di carenature New Age 02 e da quella posteriore KG oltre al kit adesivi.

The Road Rebel chassis has a frame with ø 32 Chrome moli tubes, with the new bearing hanger reinforced on the brake side. On this chassis it is possible to adjust the rear axle and the stub axle settings; on the front side it is easy to set up the caster camber by the exclusive Sniper caster system. All the racing range is supplied with the Ven 05, Ven 09 or Ven 10 brake system depending on the specified category. These brake systems are available with iron or with a ceramic discs.
The chassis is supplied with the plastic bodywork New Age 02, the rear KG and the sticker kit.

Homologation 04/CH/14 estesa 2020

MODELLO - MODEL	CATEGORIA CATEGORY	VERSIONE VERSION	FRENO BRAKE	ASSALE AXLE
KT2				
CRG.20040OKIAME	DD	Racing	Ven 09/189 MG	Ø 50x2
CRG.20027	OK-OKJ	Racing	Ven 09 dural/MG	Ø 50x2
CRG.20041	DD	Racing	Ven 10/189 MG	Ø 50x2
CRG.20014	DD	Racing	Ven 10 dural/MG	Ø 50x2
CRG.20040ROTAX	DD	Racing	Ven 09/189 MG	Ø 50x2
CRG.20040X30	DD	Racing	Ven 09/189 MG	Ø 50x2

Il telaio KT2 adotta una scocca con tubi di acciaio cromo molibdeno di ø 30mm con i nuovi scatolati portacuscinetti e rinforzo sul lato freno. Sui telai KT2 è possibile regolare sia l'altezza da terra dell'assale posteriore che quella dei fuselli anteriori; inoltre sull'anteriore è possibile registrare camber e caster molto facilmente grazie all'esclusivo sistema Sniper.
Su tutta la gamma Racing viene montato il sistema frenante Ven 09 o Ven 10 a seconda del modello di telaio scelto oltre alla possibilità di scegliere fra i dischi in ghisa o quelli in duralcan.
Il telaio viene fornito completo di carenature New Age 02 e da quella posteriore KG oltre al kit adesivi.

The KT2 chassis has a frame with ø 30Chrome moli tubes, with the new bearing hanger reinforced on the brake side. On this chassis it is possible to adjust the rear axle and the stub axle settings; on the front side it is easy to set up the caster camber by the exclusive Sniper caster system. All the racing range is supplied with the Ven 09 or Ven 10 brake system depending on the specified category. These brake systems are available with iron or with a ceramic discs.
The chassis is supplied with the plastic bodywork New Age 02, the rear KG and the sticker kit.

Homologation 70/CH/20

MODELLO - MODEL	CATEGORIA CATEGORY	VERSIONE VERSION	FRENO BRAKE	ASSALE AXLE
KT3				
CRG.20021	OK-OKJ	Racing	Ven 09/189 MG	Ø 50x2
CRG.20029	OK-OKJ	Racing	Ven 09 dural/MG	Ø 50x2
CRG.20015	DD	Racing	Ven 10/189 MG	Ø 50x2
CRG.20013	DD	Racing	Ven 10/dural/189/MG	Ø 50x2

OPTIONAL MAGNESIUM - OKJ - DD + € 50,00 - KZ + € 90,00

Il telaio KT3 adotta una scocca con tubi di acciaio cromo molibdeno di ø 28mm per quanto riguarda i longheroni mentre per le traverse queste sono di ø 30mm con i nuovi scatolati portacuscinetti e rinforzo sul lato freno. Sui telai KT3 è possibile regolare sia l'altezza da terra dell'assale posteriore che quella dei fuselli anteriori; inoltre sull'anteriore è possibile registrare camber e caster molto facilmente grazie all'esclusivo sistema Sniper. Su tutta la gamma Racing viene montato il sistema frenante Ven 09 o Ven 10 a seconda del modello di telaio scelto oltre alla possibilità di scegliere fra i dischi in ghisa o quelli in duralcan.
Il telaio viene fornito completo di carenature New Age 02 e da quella posteriore KG oltre al kit adesivi.

The KT3 chassis has a frame with ø 28 Chrome moli tubes, on the long rail and the cross bar ø 30 tube with the new bearing hanger reinforced on the brake side. On this chassis it is possible to adjust the rear axle and the stub axle settings; on the front side it is easy to set up the caster camber by the exclusive Sniper caster system. All the chassis range is supplied with the Ven 09 or Ven 10 brake system depending on the specified category. These brake systems are available with iron or with a ceramic discs. The chassis is supplied with the plastic bodywork New Age 02, the rear KG and the sticker kit.

Homologation 71/CH/20

MODELLO - MODEL	CATEGORIA CATEGORY	VERSIONE VERSION	FRENO BRAKE	ASSALE AXLE
GEM STAR				
CRG.20037	OK-OKJ	Racing	Ven 09/189 MG	Ø 50x2
CRG.20025	OK-OKJ	Racing	Ven 09 dural/MG	Ø 50x2
CRG.20038	DD	Racing	Ven 10/189 MG	Ø 50x2
CRG.20030	DD	Racing	Ven 10/dural/MG	Ø 50x2

Il telaio Gem Star adotta una scocca con tubi di acciaio cromo molibdeno di ø 30mm per quanto riguarda i longheroni mentre per le traverse queste sono di ø 32mm con i nuovi scatolati portacuscinetti e rinforzo sul lato freno. Sui telai Gem Star è possibile regolare sia l'altezza da terra dell'assale posteriore che quella dei fuselli anteriori; inoltre sull'anteriore è possibile registrare camber e caster molto facilmente grazie all'esclusivo sistema Sniper. Su tutta la gamma Racing viene montato il sistema frenante Ven 09 o Ven 10 a seconda del modello di telaio scelto oltre alla possibilità di scegliere fra i dischi in ghisa o quelli in duralcan.
Il telaio viene fornito completo di carenature New Age 02 e da quella posteriore KG oltre al kit adesivi.

The Gem Star chassis has a frame with ø 30 Chrome moli tubes on the long chassis rail and the cross bars ø 32 tubes; the new bearing hanger reinforced on the brake side. On the Gem Star chassis it is possible to adjust the rear axle and the stub axle settings; on the front side it is easy to set up the caster camber by the exclusive Sniper caster system. All the racing range is supplied with the Ven 09 or Ven 10 brake system depending on the specified category. These brake systems are available with iron or with a ceramic discs.
The chassis is supplied with the plastic bodywork New Age 02, the rear KG and the sticker kit. .

Homologation 42/CH/20

MODELLO - MODEL	CATEGORIA CATEGORY	VERSIONE VERSION	FRENO BRAKE	ASSALE AXLE
BLACK WHEEL				
CRG.20039	KZ	Racing	Ven 09/189 MG	Ø 50x2
CRG.20011	KZ	Racing	Ven 09 dural/MG	Ø 50x2

OPTIONAL MAGNESIUM - OKJ - DD + € 50,00 - KZ + € 90,00

Il telaio Black Wheel adotta una scocca con tubi di acciaio cromo molibdeno di ø 32mm con i nuovi scatolati portacuscinetti e rinforzo sul lato freno. Sui telai Black Wheel è possibile regolare sia l'altezza da terra dell'assale posteriore che quella dei fuselli anteriori; inoltre sull'anteriore è possibile registrare camber e caster molto facilmente grazie all'esclusivo sistema Sniper. Su tutta la gamma Racing viene montato il sistema frenante Ven 09 o Ven 10 a seconda del modello di telaio scelto oltre alla possibilità di scegliere fra i dischi in ghisa o quelli in duralcan.
Il telaio viene fornito completo di carenature New Age 02 e da quella posteriore KG oltre al kit adesivi.

The Black Wheel chassis has a frame with ø 32 Chrome moli tubes, with the new bearing hanger reinforced on the brake side. On this chassis it is possible to adjust the rear axle and the stub axle settings; on the front side it is easy to set up the caster camber by the exclusive Sniper caster system. All the racing range is supplied with the Ven 09 or Ven 10 brake system depending on the specified category. These brake systems are available with iron or with a ceramic discs.
The chassis is supplied with the plastic bodywork New Age 02, the rear KG and the sticker kit.

Homologation 23/CH/20

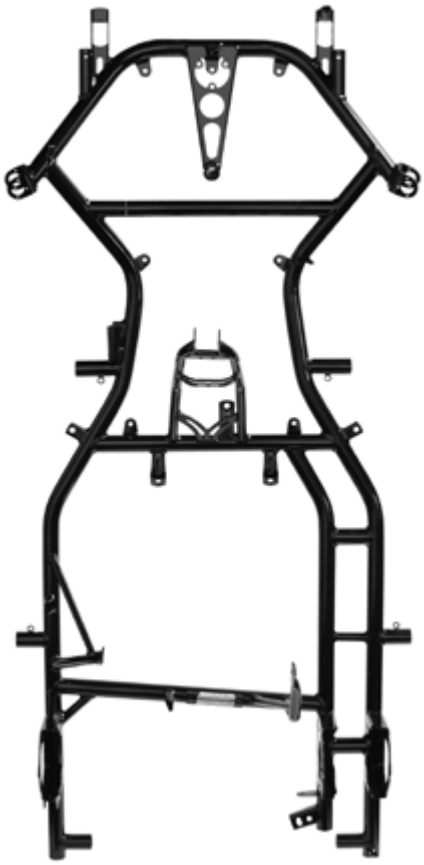

MODELLO - MODEL	Ø TUBI Ø TUBES	VERSIONE VERSION	FRENO BRAKE	ASSALE AXLE
DARK RIDER DD2				
CRG.10645	30-30	Racing	Ven 09/189 G	Ø 40x2
CRG.10345	30-32	Racing	Ven 09/189 G	Ø 40x2
CRG.10346	30-32	Racing	Ven 09/195 dural	Ø 40x2
CRG.20043	32-32	Racing	Ven 09/189 G	Ø 40x2
CRG.20045	32-32	Racing	Ven 09/195 dural	Ø 40x2

OPTIONAL MAGNESIUM - OKJ - DD + € 50,00 - KZ + € 90,00

La serie dei telai Dark Rider adotta una scocca con l'innovativo sistema di fissaggio del motore che permette di variarne il passo. I Dark Rider sono tre, uno con tubi d'acciaio cromo molibdeno di ø 32mm, uno con tubi di acciaio cromo molibdeno di ø 30mm ed il terzo con tubi di acciaio cromo molibdeno di ø 30mm per quanto riguarda i longheroni, mentre per le traverse queste sono di ø 32mm tutte e tre le versioni con il nuovo scatolato dalla parte del freno. Sui telai della serie Dark Rider è possibile regolare l'altezza da terra dei fuselli anteriori; inoltre sull'anteriore è possibile registrare camber e caster molto facilmente grazie all'esclusivo sistema Sniper. Su tutta la gamma Racing viene montato il sistema frenante Ven 09 dove è possibile scegliere fra i dischi in ghisa o quelli in duralcan.
Il telaio viene fornito completo di carenature New Age 02 e dal kit adesivi.

The series of Dark Rider chassis has the new innovated system for the mounting of the engine which permits a variable wheel base. There are 3 Dark Riders frame, one with ø 32 Chrome moli tubes, one with ø 30 Chrome moli tubes and the third with ø 30 Chrom moli tubes on the long chassis rails and cross bars ø 32 Chrome moli tubes. All the Dark Rider with the new bearing hanger reinforced on the brake side. On all 3 of the Dark Rider karts it is possible to adjust the stub axle settings; on the front side it is easy to set up the caster camber by the exclusive Sniper caster system. All the racing range is supplied with the Ven 09 brake system. These brake systems are available with iron or with a ceramic discs.
The chassis is supplied with the plastic bodywork New Age 02,and the sticker kit.

Homologation 04/CH/14

MODELLO - MODEL	CATEGORIA CATEGORY	VERSIONE VERSION	FRENO BRAKE	ASSALE AXLE
HERO				
CRG.20503	MINI 2017	Racing/Gold	Ven New Age	Ø 30x5
CRG.20503CSAI	MINI 2017	Racing/Gold	Ven New Age	Ø 30x5
CRG.10016	MINI	Passo 101/2016	Ven Mini	Ø 40x3
CRG.10017	MINI	Passo 101/2016	Ven Mini	Ø 50x2

Il telaio Hero adotta una scocca con tubi di acciaio cromo molibdeno di ø 28mm ed il passo da 950 mm. Sui telai della serie racing è possibile regolare sia l'altezza da terra dell'assale posteriore che quella dei fuselli anteriori, inoltre sull'anteriore è possibile registrare camber e caster molto facilmente grazie all'esclusivo sistema Sniper. Su tutta la gamma Racing viene montato il sistema frenante Ven New Age con disco flottante. Il telaio viene fornito completo di carenature New Age e da quella posteriore Mini Righetti oltre al kit adesivi.

The mini kart Hero has a frame with ø 28 Chrome moli tubes and a wheel base of 950 mm. On this chassis is possible to adjust the rear axle and the stub axle settings; on the front side it is easy to set up the caster camber by the exclusive Sniper caster system. The chassis is supplied with the Ven New Age brake system with a floating disc, New Age bodywork, rear Mini Righetti bumber and stickers kit.

Homologation 07/CH/14

MODELLO - MODEL	CATEGORIA CATEGORY	VERSIONE VERSION	FRENO BRAKE	ASSALE AXLE
PUFFO				
CRG.00169	Honda Gx35	Racing	Meccanico	Ø 45
CRG.00148	Comer	Racing	Meccanico	Ø 45

Il telaio Puffo adotta una scocca con tubi di acciaio cromo molibdeno di ø 25mm ed il passo da 860 mm. Su tutta la gamma Puffo viene montato il sistema frenante Meccanico con disco fisso. Il telaio viene fornito completo di carenature New Age e da quella posteriore MiniKG oltre al kit adesivi.

The kart Puffo has a frame with ø 25 Chrome moli tubes and a wheel base of 860 mm.The chassis is supplied with the mechanical brake system with a fixed disc, New Age bodywork, rear MiniKG bumber and stickers kit.

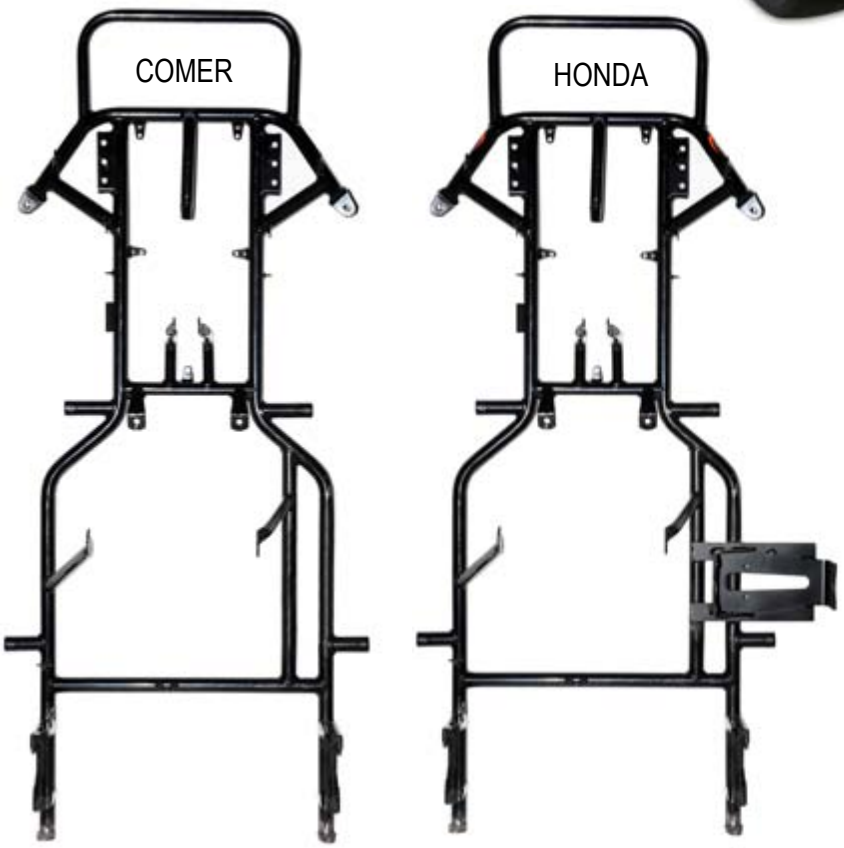

MODELLO - MODEL	CATEGORIA CATEGORY	VERSIONE VERSION	FRENO BRAKE	ASSALE AXLE
TORK				
CRG.10157	4 stroke	Racing	Cadet	Ø 40
CRG.10156	4 stroke	Racing	Cadet	Ø 50

Il telaio Tork 4 tempi, progettato per la categoria Briggs e Stratton, adotta una scocca con tubi di acciaio cromo molibdeno con 28Ø e il passo da 1030 mm. Sui telai di questa serie è possibile regolare sia l'altezza da terra dell'assale posteriore che quella dei fuselli anteriori; inoltre sull'anteriore è possibile registrare camber e caster molto facilmente grazie all'esclusivo sistema Sniper. Su tutta la gamma Racing viene montato il sistema frenante Ven mini, con disco autoventilato. Il telaio viene fornito completo di carenature New Age 02 e da quella posteriore KG, oltre al kit adesivi.

The Tork 4 stroke kart, designed for the Briggs and Stratton category has a frame with 28Ø chrome moli tubes and a wheel base of 1030 mm. On this chassis it is possible to adjust the rear axle and the stub axle settings. On the front side it is easy to set up the caster and camber with the exclusive sniper caster system. The chassis is supplied with the ven mini brake system, with an auto ventilated brake disc, New age 02 bodywork and KG rear bumper, and stickers kit.

MODELLO - MODEL	CATEGORIA CATEGORY	VERSIONE VERSION	FRENO BRAKE	ASSALE AXLE
FS4				
CRG.20051	4 stroke	Racing	Cadet	Ø 50

Il telaio FS4 quattro tempi, progettato per la categoria Briggs e Stratton, adotta una scocca con tubi di acciaio cromo molibdeno con 28Ø e il passo da 1030 mm. Sui telai di questa serie è possibile regolare sia l'altezza da terra dell'assale posteriore che quella dei fuselli anteriori; inoltre sull'anteriore è possibile registrare camber e caster molto facilmente grazie all'esclusivo sistema Sniper. Su tutta la gamma Racing viene montato il sistema frenante Ven mini, con disco autoventilato. Il telaio viene fornito completo di carenature New Age 02 e da quella posteriore KG, oltre al kit adesivi.

The FS4 four stroke kart, designed for the Briggs and Stratton category has a frame with 28Ø chrome moli tubes and a wheel base of 1030 mm. On this chassis it is possible to adjust the rear axle and the stub axle settings. On the front side it is easy to set up the caster and camber with the exclusive sniper caster system. The chassis is supplied with the ven mini brake system, with an auto ventilated brake disc, New age 02 bodywork and KG rear bumper, and stickers kit.

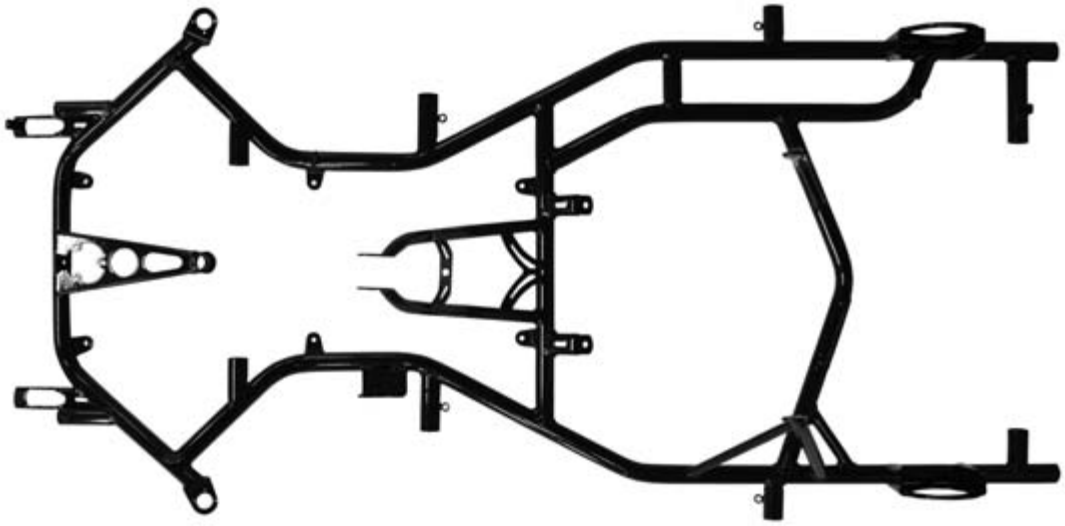

MODELLO - MODEL	CATEGORIA CATEGORY	VERSIONE VERSION	FRENO BRAKE	ASSALE AXLE
SUPER SPORT				
KT2 - CRG. 10067	DD	Economic	V10	Ø 50
KT2 - CRG.10068	OK	Economic	V09	Ø 50
R.R. - CRG.10066	KZ	Economic	V09	Ø 50
DD2 - CRG. 20143	DD2	Economic	V09	Ø 40

Per soddisfare una parte di richieste di mercato, abbiamo la linea economica SuperSport. Il telaio SuperSport viene montato con l'impianto frenanate nero e parti in alluminio, adesivi, fuselli e piantoni 2014.

To meet part of market demands, we have the economic line SuperSport. The Super sport chassis come with black braking system, aluminum parts, 2014 stickers kit, stub axles steering columns.

SCOCCHE - FRAMES

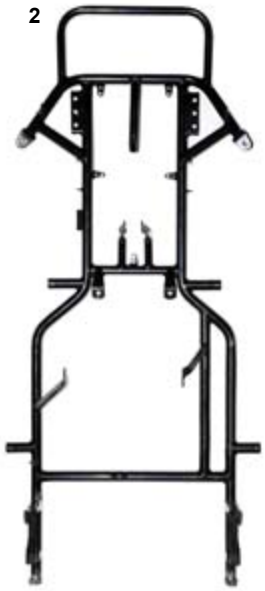

ES	COD.	DESCRIZIONE	ITEMS
1	FV0.00048	Scocca Puffo honda	Puffo frame honda
2	FVN.00084	Scocca Puffo comer	Puffo frame comer
3	FVN.01157	Scocca baby USA	Baby USA frame
	FVN.02902	Scocca mini 900 FFSA	Mini frame 900 FFSA
4	FVN.00480	Scocca mini HERO Passo 101	Mini frame HERO 101
5	FVN.03291	Scocca mini 950 hero 2016 nera	Mini frame hero 950 2016
6	FKN.03460	Scocca Roadrebel KZ 2017	Roadrebel frame KZ 2017

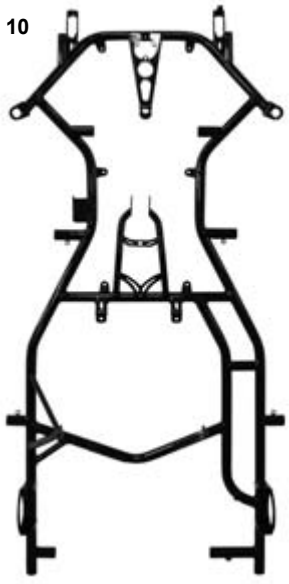

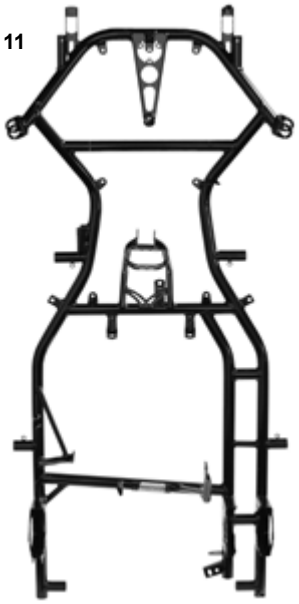

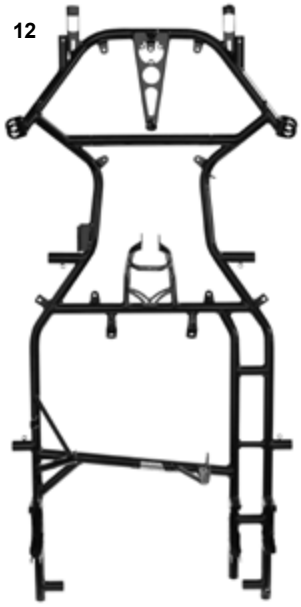

ES	COD.	DESCRIZIONE	ITEMS
	SLN.03405	Scocca Black Star JKF nera	Black Star frame JKF black
7	FVN.02277	Scocca DD2 EVO 30/30	DD2 EVO frame 30/30
	FVN.02693	Scocca DD2 EVO 30/32	DD2 EVO frame 30/32
	FVN.02854	Scocca DD2 EVO 32/32	DD2 EVO frame 32/32
8	FVN.03457	Scocca KT2 DD nera 2016	KT2 DD frame black 2016
9	FVN.03458	Scocca gem star DD nera 2016	Gem star DD black frame 2016
10	**FVN.03902**	Scocca FS4 28 4-Cycle	FS4 28 4-Cycle frame
	FVN.03905	Scocca FS4 30 4-Cycle	FS4 30 4-Cycle frame
11	FKN.03459	Scocca black wheel KZ nera 2016	DD black frame black wheel 2016
12	FVN.03249	Scocca KT3 DD nera	KT3 DD black frame
13	AML.02928	Piastrina rinforzo scatolato assale	Axle holder reinforce plate

STABILIZZATORE - TORSION BAR

ES	COD.	DESCRIZIONE	ITEMS
1	AFN.01440	Or paraurti laterale	O-ring side bumper
2	SL1.02860	Boccola paraurti laterale lunga	Side pod insert
	SL1.01349	Boccola paraurti laterale corta	Side bushing for bumper short
3	FBN.00733	Riduzione stabilizzatore xD25	Torsion bar D25
4	FMN.00731	Fascia stabilizzatore nera completa	Torsion bar black complete
5	FMG.00731	Fascia stabilizzatore oro completa	Torsion bar gold complete
6	FC0.00730	Stabilizzatore D25 L240 anteriore	Front Torsion bar D25 L240
	FC0.00239	Stabilizzatore D30 L275 anteriore	Front Torsion bar D30 L275
	FC0.01093	Stabilizzatore D30 L300 anteriore	Front Torsion bar D30 L300
7	CRG.01093	Stabilizzatore D30 L300 anteriore comp.	Front tors. bar D30 L300 complete
	CRG.00730	Stabilizzatore mini 25 anteriore comp.	Front tors. bar mini 25 complete
8	FMG.01093	Stabilizzatore D30 L300 ant. comp. oro	Front torsion bar D30 L300 gold
9	FC0.01092	Stabilizzatore D30 L480 posteriore	Rear Torsion bar D30 L480
10	CRG.01092	Stabilizzatore D30 L480 posteriore comp.	Rear Torsion bar D30 L480 complete
	CRG.00729	Stabilizzatore mini 25 posteriore comp.	Rear Torsion bar D25 L430 complete
11	FMG.01092	Stabilizzatore D30 L480 posteriore oro	Rear Torsion bar D30 L480 gold
12	FL1.00510	Stabilizzatore D30 L300 nylon	Torsion bar nylon D30 L300
13	**AFN.00732**	Vite M 8x 25 cilindrica	M 8x 25 socket head screw

A
1
7
8
2
3
4
11
13
12
9
10
18
14
5
6
B
25
15
16
10
17
20
21
9
22
23
19
24
26
27
D

CARROZZERIE NA2 - BODYWORK NA2

ES	COD.	DESCRIZIONE	ITEMS
A	CRG.01084	Kit carene NA2 completo con attacchi	NA2 fairing kit complete
	FK0.01084	Kit carene NA2 plastica	NA2 fairing plastic
1	AFS.01617	Spoiler NA2 nero	NA2 front spoiler black
2	AFS.01616	Frontalino KG CIK-FIA	KG front fairing CIK-FIA
3	AFS.1618S	Carenatura laterale NA2 sinistra	NA2 side fairing left black
4	AFS.1618D	Carenatura laterale NA2 destra	NA2 side fairing right black
5	SC0.0095S	Paraurti laterale NA2 sinistro	Side bumper NA2 left
6	SC0.0095D	Paraurti laterale NA2 destro	Side bumper NA2 right
7	SC0.01635	Paraurti anteriore superiore NA2	Front bumper bar top NA2
8	SC0.01355	Parauti anteriore inferiore NA2	Front bumper bar bottom NA2
9	SC0.02452	Supporto frontalino superiore	Front fairing support top
10	SC0.03481	Supporto frontalino inferiore 2016	Front fairing support bottom 2016
11	FZ0.01439	Molla paraurti laterale	Side bumper spring
12	AFN.00909	Vite M 8x 20 esagonale	M 8x 20 hexagonal head screw
13	AFN.00350	Rondella 8,5-16x1,5	Washer 8,5-16x1,5
14	FAN.00355	Spessore 6,5-18x14 frontalino nero	Spacer 6,5-18x14 black
15	AFS.00504	Supporto spoiler plastica	Spoiler plastic support
16	AFS.00503	Gancio rapido spoiler (1)	Fast clamps for spoiler (1)
17	SZ0.00102	Spina elastica supporto frontalino	Front fairing elastic pin
18	AFS.00101	Gommino supporto frontalino	Front fairing rubber
19	SBN.00103	Perno supporto frontalino inferiore nero	Front fairing support pivot black
20	AFN.00105	Rondella 6,5-12x1,5	Washer 6,5-12x1,5
21	AFN.00106	Dado M 6 autoblock basso	Nut M 6 low self-locking
22	SAN.00249	Rondella 6 svasata nera	Washer 6 countersunk black
23	AFN.00261	Vite M 6x 20 svasata	M 6x 20 countersunk head screw
24	AFS.00258	Gommino pianale	Floor tray rubber
25	AFS.03262	Kit attacco spoiler KG	Spoiler KG connection kit assy
B	FKN.01582	Kit supporti & viti carrozzerie NA2	Screw & supports for fairings NA2
26	FC0.02475	Supporto pulsantiera DD	Button support DD TAG
27	FC0.00793	Supporto pulsantiera Rotax	Button support Rotax
D	AFS.03287	Kit attacco spoiler CIK-FIA	Spoiler CIK-FIA kit assy

A

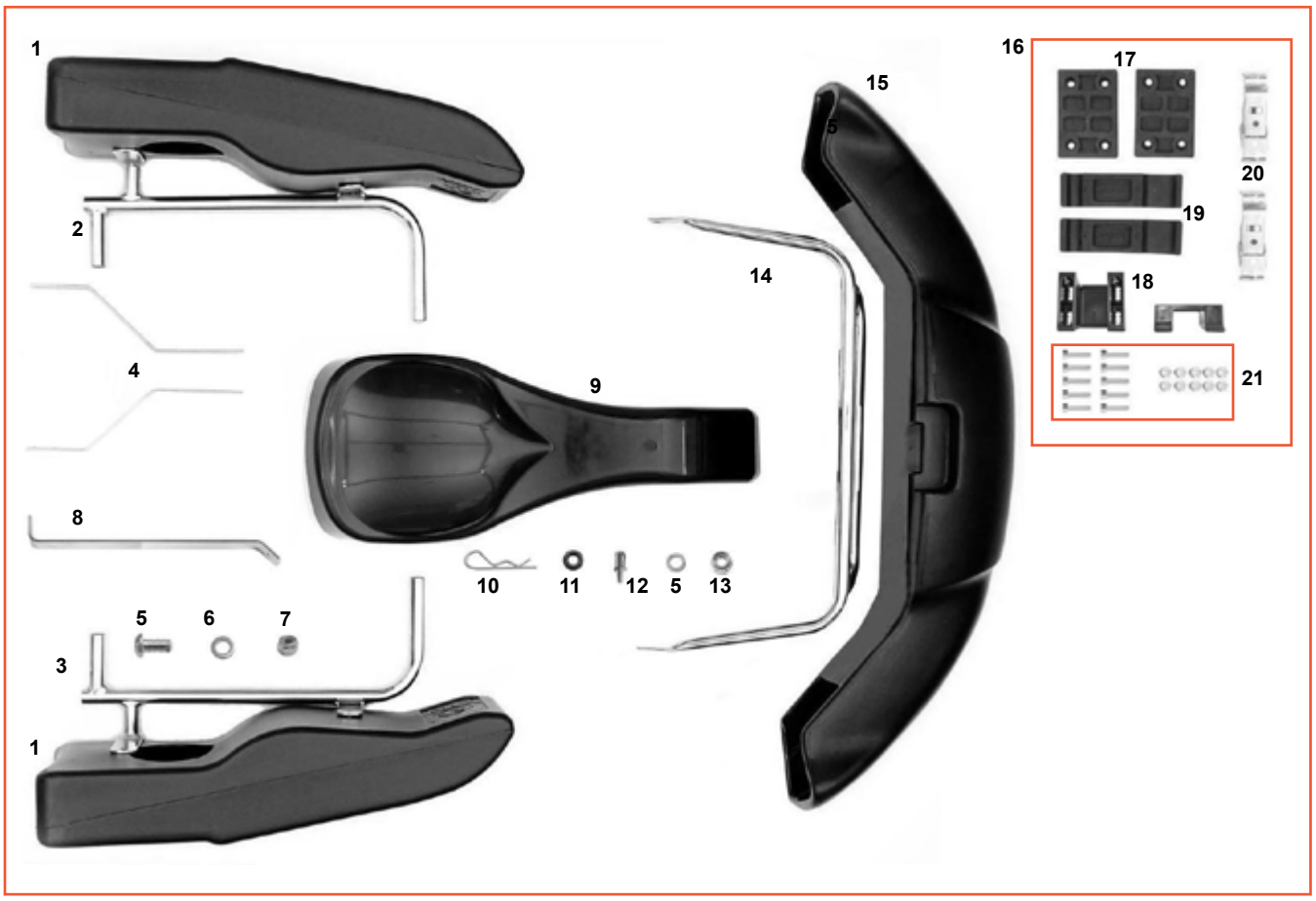
1
2
4
9
8
10
11
12
5
13
5
6
7
3
1
15
5
14
16
17
20
19
18
21

22

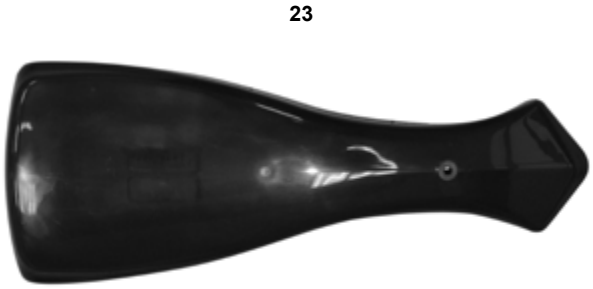
23

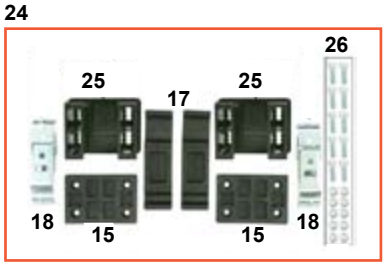
24
26
25
17
25
18
15
15
18

ES	COD.	DESCRIZIONE	ITEMS
A	CRG.01646	Kit carene mini NA con attacchi no CSAI	Bodywork set mini NA with attach. no CSAI
	FK0.01646	Kit carene mini NA solo plastica	Fairings kit NA mini plastic
1	AFS.00757	Carenatura laterale new age mini/Puffo	New age side fairing mini/Puffo
2	SC0.1540S	Paraurti laterale mini NA sinistro	Side bumper mini NA left
3	SC0.1540D	Paraurti laterale mini NA destro	Side bumper mini NA right
4	SC0.00098	Supporto frontalino superiore CRG corto	CRG front fairing support upper
5	AFN.02144	Vite M 6x 20 bombata	M 6x 20 button head screw
6	AFN.00105	Rondella 6,5-12x1,5	Washer 6,5-12x1,5
7	AFN.00264	Dado M 6 autobloccante alto	Nut M 6 high self-locking
8	SC0.01548	Supporto frontalino inf. mini NA3/inf.XL	Front fairing support NA3/XL
9	AFS.00759	Frontalino mini NA/Puffo	NA front fairing mini/Puffo
10	SZ0.00102	Spina elastica supporto frontalino	Front fairing elastic pin
11	AFS.00101	Gommino supporto frontalino	Front fairing rubber
12	SBN.00103	Perno supporto frontalino inferiore	Front fairing support pin
13	AFN.00106	Dado M autoblock basso	Nut M6 low self-locking
14	SC0.00557	Paraurto anteriore mini NA/Puffo	NA mini/Puffo front bumper
15	AFS.00758	Spoiler mini NA/Puffo	Newage spoiler mini/Puffo
16	AFS.01551	Kit fissaggio spoiler NA mini no CSAI	NA mini spoiler kit no CSAI
17	AFS.00034	Placca fix spoiler NA interna	Plastic int.plate NA spoiler
18	AFS.03262	Kit attacco spoiler KG2015	Spoiler KG kit assy
19	AFS.00504	Supporto spoiler plastica	Spoiler plastic support
20	AFS.00503	Gancio rapido spoiler (1pz)	Fast clamps for spoiler
21	PMV.01551	Kit montaggio viti	Mounting screws kit
22	SC0.00282	Paraurti anteriore Puffo CSAI	Front bumper Puffo CSAI
23	AFS.03300	Frontalino mini KG 2015 CSAI	Mini front fairing KG 2015 CSAI
24	AFS.03302	Kit fissaggio spoiler na mini CSAI 2015	2015 mini spoiler connection kit CSAI
25	AFS.03313	Attacco spoiler CSAI	Spoiler connection CSAI
26	PMV.03302	Kit viti montaggio	Mounting screws kit

CARENA POSTERIORE MINI - REAR BUMPER MINI

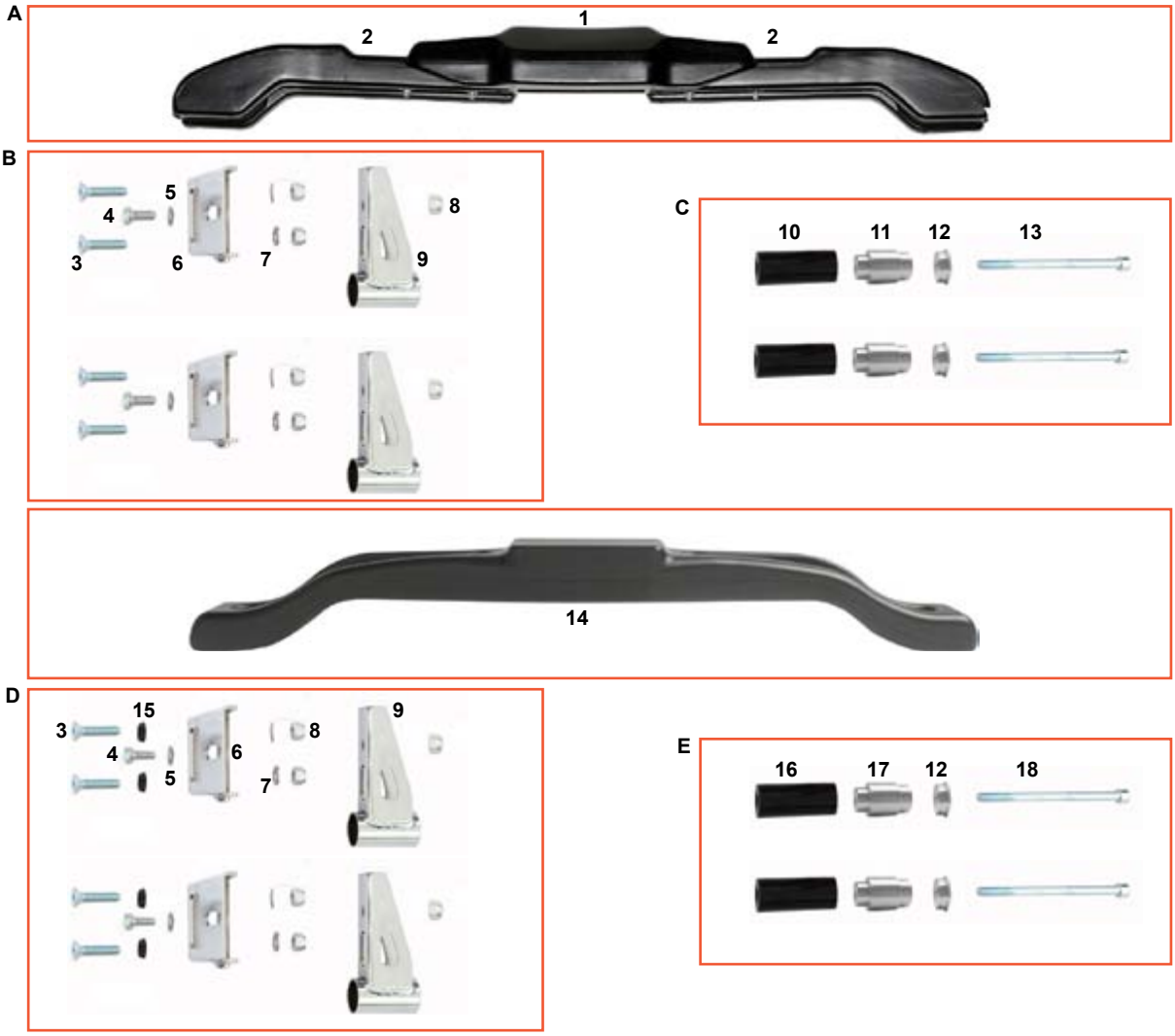

ES	COD.	DESCRIZIONE	ITEMS
A	AFS.01176	Carena posteriore mini KG	Rear bumper mini KG
1	AFS.01176CENTR	Centrale carena posteriore tris mini	Middle Rear bumper
2	AFS.01176EST	Esterno carena posteriore tris mini	External Rear bumper
B	FK0.02177	Kit supporto carena mini KG no viti	Rear bumper clamps kit KG no screw
3	AFN.00533	Vite M 8x 30 svasata	M 8x 30 countersunk head screw
4	AFN.00909	Vite M 8x 20 esagonale	M 8x 20 hexagonal head screw
5	AFN.00350	Rondella 8,5-16x1,5	Washer 8,5-16x1,5
6	SC0.01191	Piastra carena posteriore mini KG	Rear bumper mini KG support
7	AFN.02415	Rondella 8,5-24x2	Washer 8,5-24x2
8	AFN.00128	Dado M 8 autobloccante alto	Nut M 8 high self-locking
9	SC0.01341	Supporto carena posteriore mini KG	Rear bumper KG mini support
C	FKN.02469	Kit vite carena post. plastica D25 Puffo	Rear bumper kit D21>D25 Puffo comp.
10	AFS.01381	Gommino paraurti D21>D25	Rear bumper rubber D21>D25
11	SL1.02469	Boccola interna D21>D25 carena Puffo	Internal bushing D21>D25 fairing Puffo
12	SL1.01710	Boccola esterna carena posteriore	Rear bumper external bushing
13	AFN.00114	Vite M 8x140 cilindrica	M 8x140 socket head screw
14	AFS.02817	Carena posteriore mini RR	Rear bumper mini RR
D	FK0.02118	Kit supporti carena mini RR	Rear bumper clamps kit RR
15	SAN.00146	Rondella 8 svasata nera	Washer 8 countersunk black
E	FKN.00562	Kit vite car. post. plastica D28 mini	Rear bumper kit D28 mini complete
16	AFS.00563	Gommino paraurti D23>D28	Rear bumper rubber D23>D28
17	SL1.02055	Boccola interna D23>D28 car. post. mini	Internal bushing D23>D28 bumper mini
18	AFN.02476	Vite M 8x130 cilindrica	M 8x130 socket head screw

CARENA POSTERIORE KG - REAR BUMPER KG

A

B

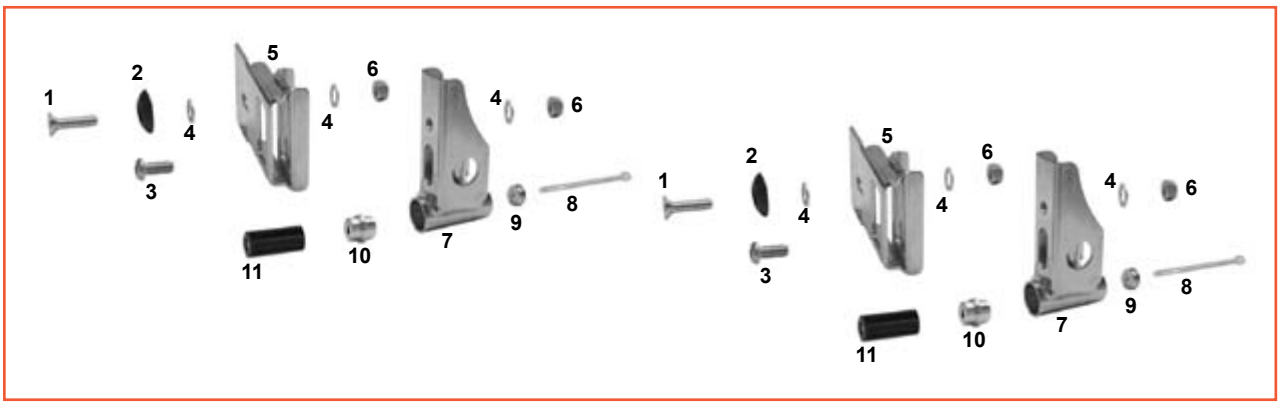

C

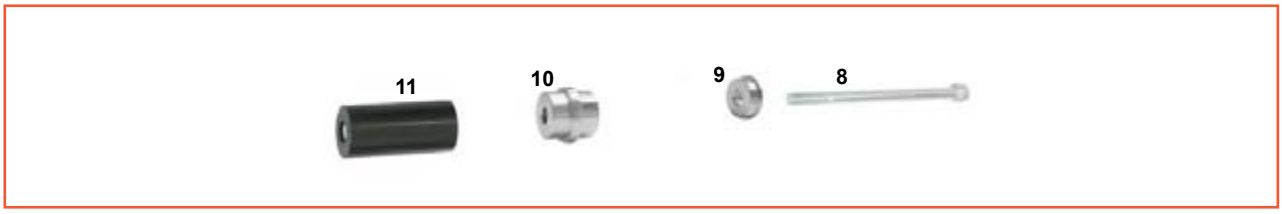

ES	COD.	DESCRIZIONE	ITEMS
A	AFS.00532	Carena posteriore KG CIK/14	Rear bumper KG CIK/14
B	FK0.00535.28	Kit supporti carena posteriore 28 KG	Rear bumper mounting kit 28 KG
B	FK0.00535.30	Kit supporti carena posteriore 30 KG	Rear bumper mounting kit 30 KG
B	FK0.00535.32	Kit supporti carena posteriore 32 KG	Rear bumper mounting kit 32 KG
C	FKN.00491	Kit vite carena post. plas. D28 completo	Rear bumper kit (rubber 28) complete
C	FKN.01711	Kit vite carena post. plas. D30 completo	Rear bumper kit (rubber 30) complete
C	FKN.01712	Kit vite carena post. plas. D32 completo	Rear bumper kit (rubber 32) complete
1	AFN.00533	Vite M 8x 30 svasata	M 8x 30 countersunk head screw
2	FAN.00260	Rondella 8 sedile all. nera	Alu seat washer black 8
3	AFN.00379	Vite M 8x 20 bombata	M 8x 20 convex head screw
4	AFN.00350	Rondella 8,5-16x1,5	Washer 8,5-16x1,5
5	SC0.00535	Piastra supporto carena post. KG14	Rear bumper KG14 connection
6	AFN.00160	Dado M 8 autoblock basso	Nut M 8 low self-locking
7	SC0.00532	Supporto carena posterioe KG14	Rear bumper KG14 cairing connection
8	AFN.01416	Vite M 8x120 cilindrica 12.9	M 8x120 socket head screw 12.9
9	SL1.01710	Boccola esterna carena posteriore	Rear bumper external bushing
10	SL1.02263	Boccola interna D23>28 carena post.	Internal bushing D23>D28 plastic
10	SL1.01712	Boccola interna D25>30 carena post.	Internal bushing D25>D30 plastic
10	SL1.01711	Boccola interna D28>32 carena post.	Internal bushing D28>D32 plastic
11	AFS.00563	Gommino paraurti D23>D28	Rear bumper rubber D23>D28
11	AFS.01382	Gommino paraurti D25>D30	Rear bumper rubber D25>D30
11	AFS.00115	Gommino paraurti D28>D32	Rear bumper rubber D28>D32

ACCESSORI PARAURTI POSTERIORE - REAR BUMPER ACCESSORIES

ES	COD.	DESCRIZIONE	ITEMS
1	SL1.01143	Boccola int. D25>D30 paraurti posteriore	Internal bushing D25>D30 rear bumper
2	SL1.00117	Boccola int. D28>D32 paraurti posteriore	Internal bushing D28>D32 rear bumper
3	SAN.01219	Boccola int. D21>D25 paraurti post.corta	Internal bushing D21>D25 rear bumper
3	SAN.01193	Boccola int. D23>D28 paraurti fer. corta	Internal bushing D23>D28 rear bumper
3	SAN.01195	Boccola int. D25>D30 paraurti fer. corta	Internal bushing D25>D30 rear bumper
3	SAN.01194	Boccola int. D28>D32 paraurti fer. corta	Internal bushing D28>D32 rear bumper
4	AFN.00116	Or paraurti posteriore	Or rear bumper
5	SL1.00119	Boccola esterna paraurti posteriore ferro	Bumper external bushing metal
6	SL1.01147	Boccola esterna alluminio paraurti post.	Bumper external bushing alu.
7	AFS.01381	Gommino paraurti D21>D25	Rear bumper rubber D21>D25
7	AFS.00563	Gommino paraurti D23>D28	Rear bumper rubber D23>D28
7	AFS.01382	Gommino paraurti D25>D30	Rear bumper rubber D25>D30
7	AFS.00115	Gommino paraurti D28>D32	Rear bumper rubber D28>D32
8	FC0.00728	Barra paraurti posteriore 55 ferro	Rear bumper bottom bar metal 55
8	FC0.00856	Barra paraurti posteriore 58 ferro	Rear bumper bottom bar metal 58
8	FC0.00112	Barra paraurti posteriore 61,5-62 ferro	Rear bumper bottom bar metal 61,5-62
8	FC0.00854	Barra paraurti posteriore 63 ferro	Rear bumper bottom bar metal 63
9	FC0.00727	Paraurto posteriore ferro 55	Rear bumper metal 55
9	FC0.00391	Paraurto posteriore ferro 61	Rear bumper metal 61
9	FC0.00109	Paraurto posteriore ferro 62	Rear bumper metal 62
10	FKN.00960	Kit vite paraurti posteriore ferro D30	Rear bumper kit (rubber 30) complete
10	FKN.00113	Kit vite paraurti posteriore ferro D32	Rear bumper kit (rubber 32) complete
	AFN.00108	Rondella 8,5-18x2	Washer 8,5-18x2
	AFS.00115	Gommino paraurti D28>D32	Rear bumper rubber D28>D32
	AFN.00116	Or paraurti posteriore	Or rear bumper
	SL1.00117	Boccola interna D28>D32 paraurti post.	Internal bushing D28>D32 rear bumper
	SZ0.00119	Boccola esterna paraurti posteriore	Bumper externak bushing metal
	AFN.00114	Vite M 8x140 cilindrica	M 8x140 socket head screw
11	FK0.03384.30	Kit supporto paraurti posteriore DD2 D30	Rear bumper DD2 D30 kit
11	FK0.03384.32	Kit supporto paraurti posteriore DD2 D32	Rear bumper DD2 D32 kit

KIT ADESIVI - STICKERS KIT

1

2

3

4

ES	COD.	DESCRIZIONE	ITEMS
1	AFS.03433	Kit adesivo CRG 2016 completo	Stickers kit complete CRG 2016
2	AFS.03451	Kit adesivi CRG spoiler 2016	Spoiler stickers kit 2016 CRG
3	AFS.03450	Kit adesivi CRG mini 2016	Stickers kit new age CRG 2016
4	AFS.03453	Kit adesivi CRG spoiler mini 2016	Spolier stickers kit new age CRG 2016

KIT ADESIVI - STICKERS KIT

5

6

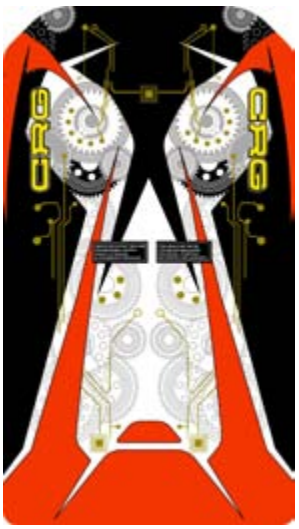

7

8

9

10

11

12

13

14

ES	COD.	DESCRIZIONE	ITEMS
5	AFS.01333	Kit adesivi decorazione	Sticker decoration kit
6	AFS.03434	Adesivo pianale 2016	Floor tray sticker 2016
7	AFS.00921NR.**	Adesivo numero std nr.**	Number sticker std nr.**
8	REPCORSENR.**	Adesivo numero race nr.**	Numbers sticker race nr.**
9	AFS.00244	Fascetta tabella portanumero	Number plate clip
10	AFS.01904	Adesivo carena post. portanumero	Rear number plate sticker
11	AFS.00242	Tabella portanumero	Number plate
12	AFS.03452	Kit adesivi CRG 2016 tanica LT.8,5	Tank stickers kit LT.8,5 CRG 2016
13	AFS.03454	Kit adesivi CRG 2016 mini tanica LT3	Tank stickers kit mini LT.3 CRG 2016
14	AFS.04076	Adesivo CRG decoraz. furgone 120x70	Sticker for van 120x70

** numero adesivo / number sticker

ACCESSORI TANICA - FUEL TANK ACCESSORIES

ES	COD.	DESCRIZIONE	ITEMS
1	FM0.00138	Tanica LT.8,5 DD completa	Fuel tank LT.8,5 DD complete
1	FM0.00322	Tanica LT.8,5 KZ completa	Fuel tank LT.8,5 KZ complete
2	AFS.02766	Tanica LT.3,5 mini completa	Fuel tank LT.3,5 mini complete
3	AFS.01383	Tappo tanica mini nero	Fuel tank cap mini black
4	AFS.00143	Tappo tanica	Fuel tank cap
5	AFN.00144	Guarnizione tappo tanica	Fuel tank cap rubber seal
	AFS.03611	Guarnizione tappo tanica mini	Fuel tank cap mini rubber seal
6	AFS.01982	Raccordo T festo	T-fitting festo
7	AFS.01981	Raccordo Y festo	Y-fitting festo
8	AFN.01380	Rondella 10-16x1 rame	Copper washer 10-16x1
9	AFS.00325	Dado raccordo tanica	Nut fitting tank
10	AFS.00571	Raccordo pescante tanica mini	Mini tank suction fitting
11	AFN.00323	Rondella 10-16x1 fibra	Fiber washer 10-16x1
12	SZ0.00324	Raccordo ritorno tanica KZ	Return fitting KZ
13	AFN.01379	Or raccordo tanica	Fuel tank fitting o-ring
14	SL1.00147	Pescante	Fuel tank catch
15	AFS.00142	Tappino pescante tanica (rosso)	Fuel research fitting tap (red)
16	SL1.00149	Raccordo pescante tanica	Fuel tank catch fitting
17	AFS.00141	Tappino sfiato tanica (nero)	Cap fuel tank (black)
18	SL1.00151	Raccordo sfiato DD/KZ	Bleeder fitting DD/KZ
19	CRG.00147	Pescante tanica LT.8,5 completo	Fuel tank LT.8,5 suction fitting
20	AFS.00753	Tanica recupero	Recovery tank
21	AFS.01016	Filtro benzina	Fuel filter
	AMS.00139	Tubo benzina al metro	Fuel pipe per meter

ASSALI - REAR AXLES

	COD.	DESCRIZIONE	ITEMS
Puffo	FC0.01315	Assale 45 Puffo	Axle 45 Puffo
	FL1.00395	Assale 25 Puffo	Axle 25 Puffo
Mini Baby	FBN.01530	Assale 30 mini/baby new age M	Axle 30 mini/baby new age M
	FBN.01530H	Assale 30 mini/baby new age H	Axle 30 mini/baby new age H
	FBN.01530SS	Assale 30 mini/baby new age S	Axle 30 mini/baby new age S
	FBN.00737	Assale 30 miniclass L 900 nero	Axle 30 miniclass L 900 black
	FBN.00446	Assale 40 std nero M	Axle 40 std black M
DD2	FBN.01663K	Assale 40 DD2 1040 K	Axle 40 DD2 1040 K
	FBN.01663	Assale 40 DD2 1040 M	Axle 40 DD2 1040 M
	FBN.01663S	Assale 40 DD2 1040 S	Axle 40 DD2 1040 S
	FBN.01663H	Assale 40 DD2 1040 H	Axle 40 DD2 1040 H
	FKG.02627	Kit bussola assale DD2 oro	Bushing kit for axle DD2 gold
M20	FBN.00155	Assale 50 M20 std nero 1020	Axle 50 M20 std black 1020
	FBN.00155.1040	Assale 50 M20 std nero 1040	Axle 50 M20 std black 1040
	FBN.00155.1060	Assale 50 M20 std nero 1060	Axle 50 M20 std black 1060
	FBN.01313.1020	Assale 50 M20 std nero R 1020	Axle 50 M20 std black R 1020
	FBN.01313	Assale 50 M20 std nero R 1040	Axle 50 M20 std black R 1040
	FBN.01313.1060	Assale 50 M20 std nero R 1060	Axle 50 M20 std black R 1060
S20	FBN.01309	Assale 50 S20 std nero 1020	Axle 50 S20 std black 1020
	FBN.01309.1040	Assale 50 S20 std nero 1040	Axle 50 S20 std black 1040
	FBN.01309.1060	Assale 50 S20 std nero 1060	Axle 50 S20 std black 1060
S25	FBN.01311	Assale 50 S25 std nero 1020	Axle 50 S25 std black 1020
	FBN.01311.1040	Assale 50 S25 std nero 1040	Axle 50 S25 std black 1040
	FBN.01311.1060	Assale 50 S25 std nero 1060	Axle 50 S25 std black 1060
M25	FBN.01684	Assale 50 M25 std nero	Axle 50 M25 std black
T1	FBN.155T1	Assale 50 T1 nero 1020	Axle 50 T1 black 1020
T2	FBN.155T2	Assale 50 T2 nero 1020	Axle 50 T2 black 1020
	FBN.155T2.1040	Assale 50 T2 nero 1040	Axle 50 T2 black 1040
	FBN.155T2.1060	Assale 50 T2 nero 1060	Axle 50 T2 black 1060
	FBN.T2RIN.1040	Assale 50 T2 nero Rin. 1040	Axle 50 T2 black R 1040
	FBN.T2RIN.1060	Assale 50 T2 nero Rin. 1060	Axle 50 T2 black R 1060
T3	FBN.155T3	Assale 50 T3 nero 1020	Axle 50 T3 black 1020
T4	FBN.155T4	Assale 50 T4 nero 1020	Axle 50 T4 black 1020
	FBN.155T4.1040	Assale 50 T4 nero 1040	Axle 50 T4 black 1040
	FBN.155T4.1060	Assale 50 T4 nero 1060	Axle 50 T4 black 1060
T5	FBN.155T5	Assale 50 T5 nero 1020	Axle 50 T5 black 1020
	FBN.T5RIN	Assale 50 T5 nero Rin. 1040	Axle 50 T5 black 1040 R
	FBN.T5RIN.1060	Assale 50 T5 nero Rin. 1060	Axle 50 T5 black 1060 R
T6	FBN.155T6	Assale 50 T6 nero 1020	Axle 50 T6 black 1020
	FBN.155T6.1060	Assale 50 T6 nero 1060	Axle 50 T6 black 1060
T7	FBN.155T7	Assale 50 T7 nero 1020	Axle 50 T7 black 1020
	FBN.T7RIN	Assale 50 T7 nero Rin.1040	Axle 50 T7 black R 1040

FLANGE - FLANGES

A

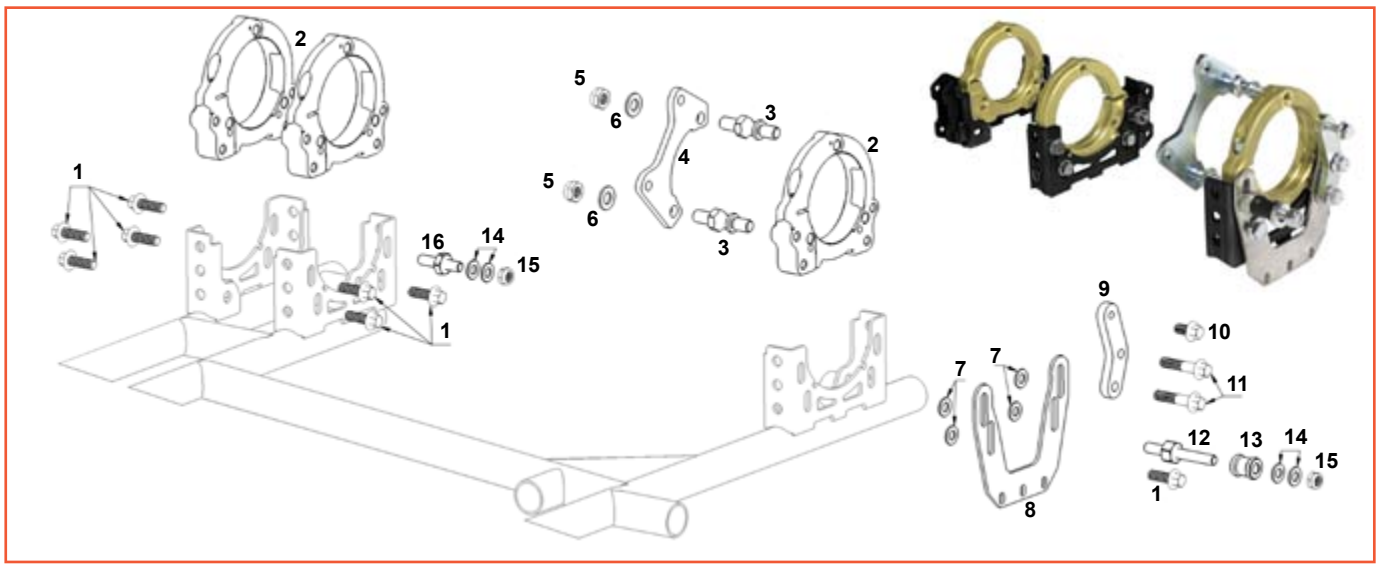

B

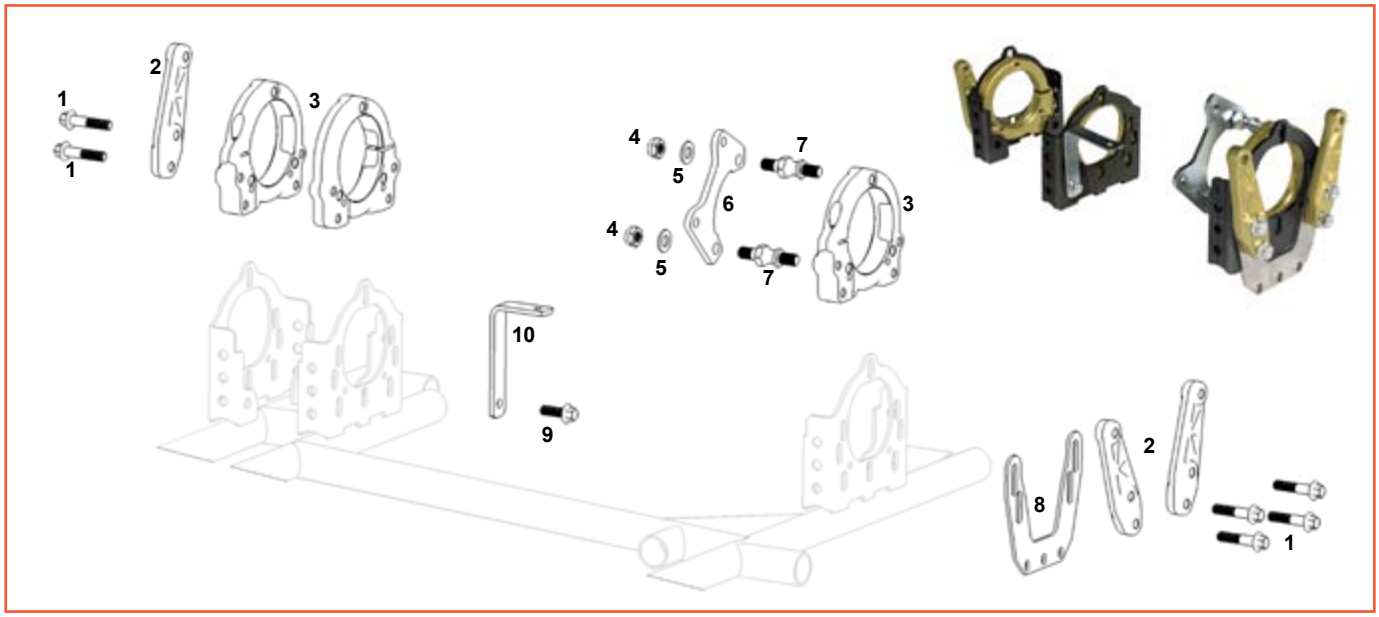

FLANGE - FLANGES

ES	COD.	DESCRIZIONE	ITEMS
A	FK0.02951	Kit flange mod.passo 2 DD	Axle flange adjustment system 2
1	AFN.00968	Vite M 8x25 flangiata	M 8x25 flanged screw
2	**FMG.03321**	Flangia assale 40/50 2015 oro reg.2	Axle flange 50 adj. system 2x2 2015
3	SZ0.00609	Prigioniero M 10x23 piastra pinza V05	M 10x23 stud brake caliper supp.
4	FC0.02869	Piastra supporto pinza V05	Brake caliper supp. V05
5	AFN.00657	Dado M10 autoblock basso	Nut M10 low self-locking
6	AFN.01637	Rondella 10,5-20x2	Washer 10,5-20x2
7	AFN.00129	Rondella 8,5-17x1,5	Washer 8,5-17x1,5
8	AML.02872	Supporto salvadisco	Disc protection support
9	SZ0.03143	Staffa attacco supporto flangia X	Plate for seat support rinforcement
10	AFN.03149	Vite M 8x20 flangiata	M 8x20 flanged head screw
11	AFN.00284	Vite M 8x38 flangiata	M 8x38 flanged head screw
12	SZ0.03145	Prigioniero lungo mod.X2	Long Stud mod.X2
13	FAN.01462	Spessore pinza 8,5x18x21 ibrido	Caliper spacer 8,5x18x21 hybrid
14	AFN.00108	Rondella 8,5-18x2	Washer 8,5-18x2
15	AFN.00128	Dado M 8 autoblock alto	Nut M 8 high self-locking
16	SZ0.03144	Prigioniero corto mod.X2	Short Stud mod.X2
B	FK0.02951KZ	Kit flange mod.passo 2 std KZ	Axle flange adjustment system 2 KZ
B	FK0.02940KZ	Kit flange mod.passo 4 std KZ	Axle flange adjustment system 4 KZ
B	FK0.02939KZ	Kit flange mod.passo 6 std KZ	Axle flange adjustment system 6 KZ
B	FK0.02869KZ	Kit flange mod.passo 8 std KZ	Axle flange adjustment system 8 KZ
1	AFN.00284	Vite M 8x38 flangiata	M 8x38 flanged head screw
2	FAG.00983	Piastra supporto rinforzo sedile	Support for seat support rinforcement
3	**FMG.03321**	Flangia assale 40/50 2015 oro reg.2	Axle flange 50 adj. system 2x2 2015
	FMG.03322	Flangia assale 50 2015 oro reg. 4	Axle flange 50 adj. system 4x4 2015
	FMG.03323	Flangia assale 50 2015 oro reg. 6	Axle flange 50 adj. system 6x6 2015
	FMG.03324	Flangia assale 50 2015 oro reg. 8	Axle flange 50 adj. system 8x8 2015
4	AFN.00657	Dado M10 autoblock basso	Nut M10 low self-locking
5	AFN.01637	Rondella 10,5-20x2	Washer 10,5-20x2
6	FC0.02869	Piastra supporto pinza V05	Brake caliper supp. V05
7	SZ0.00609	Prigioniero M10x23 piastra pinza V05	M 10x23 stud brake caliper supp
8	AML.02872	Supporto salvadisco	Disc protection support
9	AFN.00968	Vite M 8x25 flangiata	M 8x25 flanged head screw
10	FZ0.02566	Supporto paracatena KZ	Chain guard support KZ
	FZ0.03742	Supporto paracatena KZ 2016	Chain guard support KZ 2016

FLANGE - FLANGES

C

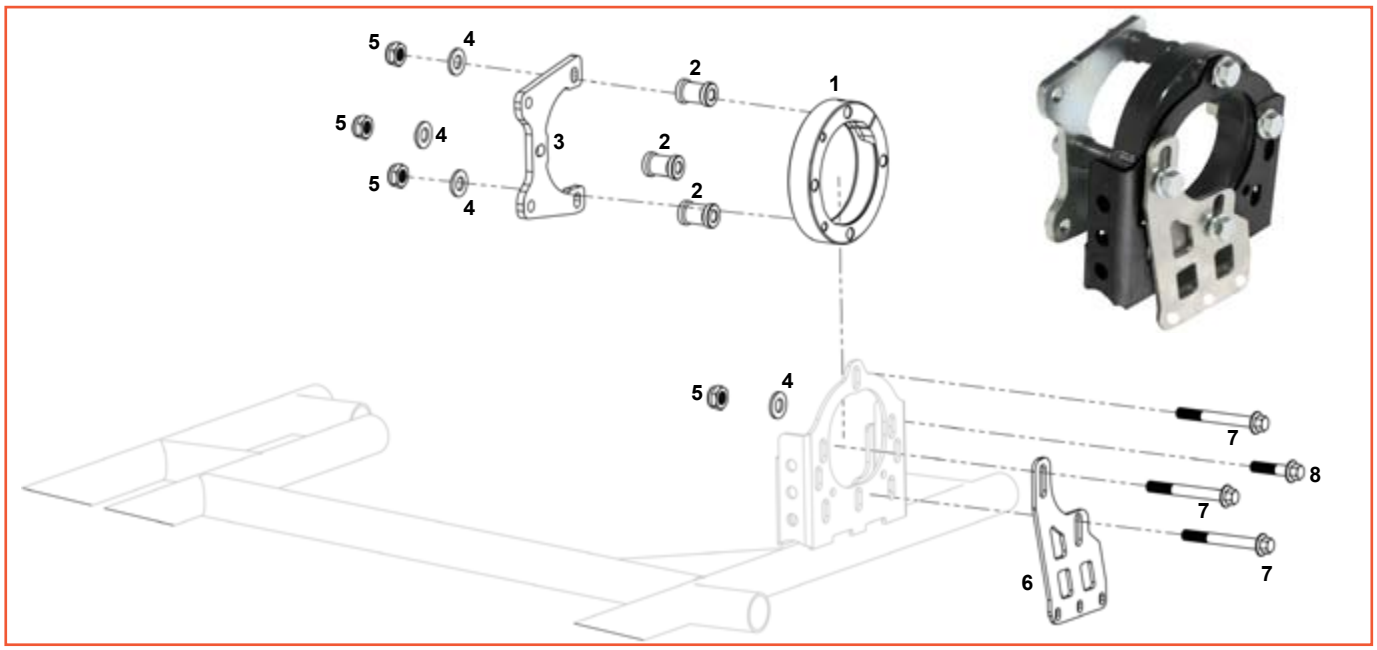

D

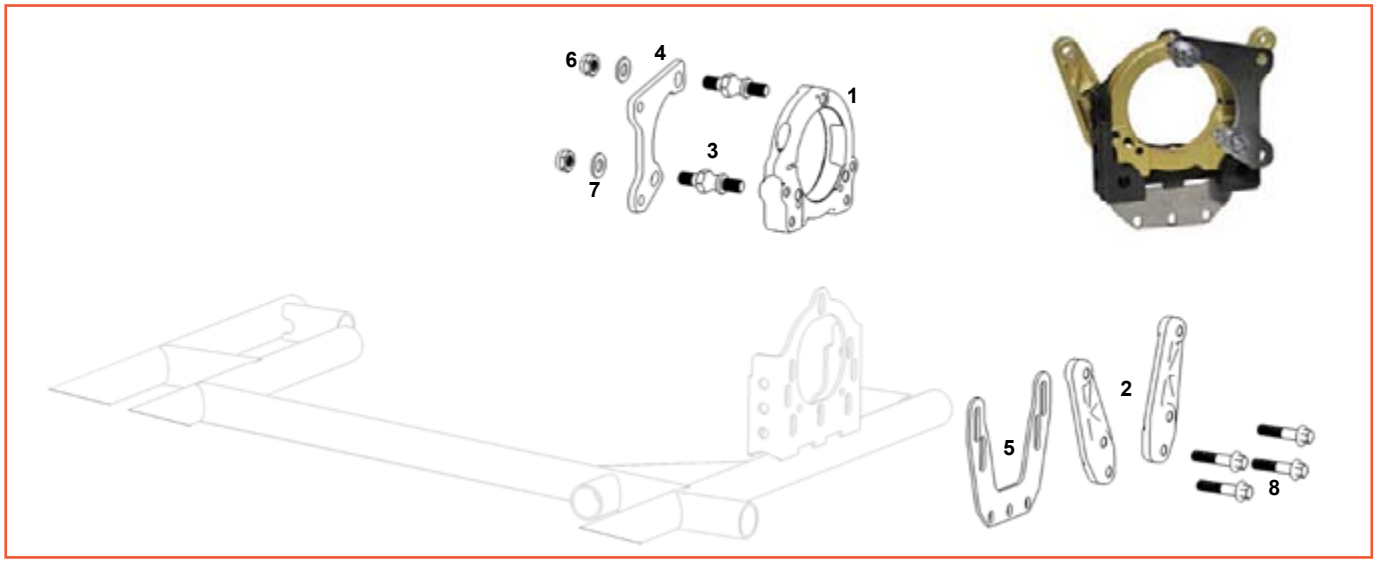

ES	COD.	DESCRIZIONE	ITEMS
C	FK0.01426	Kit flange ibrido	Axle flange hybrid
1	FMN.01426	Flangia assale 50 4F ibrido con vite	Axle flange 50 4H hybrid complete
2	FAN.01472	Spessore pinza 8,5x18x27 DD2	Caliper spacer 8,5x18x27
3	FZ0.00964	Piastra supporto pinza V05 DD2 evo	Caliper supp. V05 DD2 evo
4	AFN.01637	Rondella 10,5-20x2	Washer 10,5-20x2
5	AFN.00657	Dado M10 autoblock basso	Nut M10 low self-locking
6	AML.01629	Supporto salvadisco	Disc protection support
7	AFN.00637	Vite M 8x70 flangiata	M 8x70 flanged head screw
8	AFN.00284	Vite M 8x38 flangiata	M 8x38 flanged head screw
D	FK0.02886	Kit flangia DD2 flangiato mod.passo 8	Caliper support adjust. System DD2 8
1	FMG.02886	Flangia assale 50 oro rid. passo 8	Axle flange 50 adjust. system 8
2	FAG.00983	Piastra supporto rinforzo sedile	Plate for seat support rinforcement
3	SZ0.00609	Prigioniero M10x23 piastra pinza V05	Stud M 10x23 brake caliper support
4	FZ0.00942	Piastra supporto pinza V05 DD2	Caliper supp. V05 DD2
5	AML.02872	Supporto salvadisco +5 +10 CRG	Disc protection support +5 +10 CRG
6	AFN.00657	Dado M10 autoblock basso	Nut M10 low self-locking
7	AFN.01637	Rondella 10,5-20x2	Washer 10,5-20x2
8	AFN.00284	Vite M 8x38 flangiata	M 8x38 flanged head screw

FLANGE - FLANGES

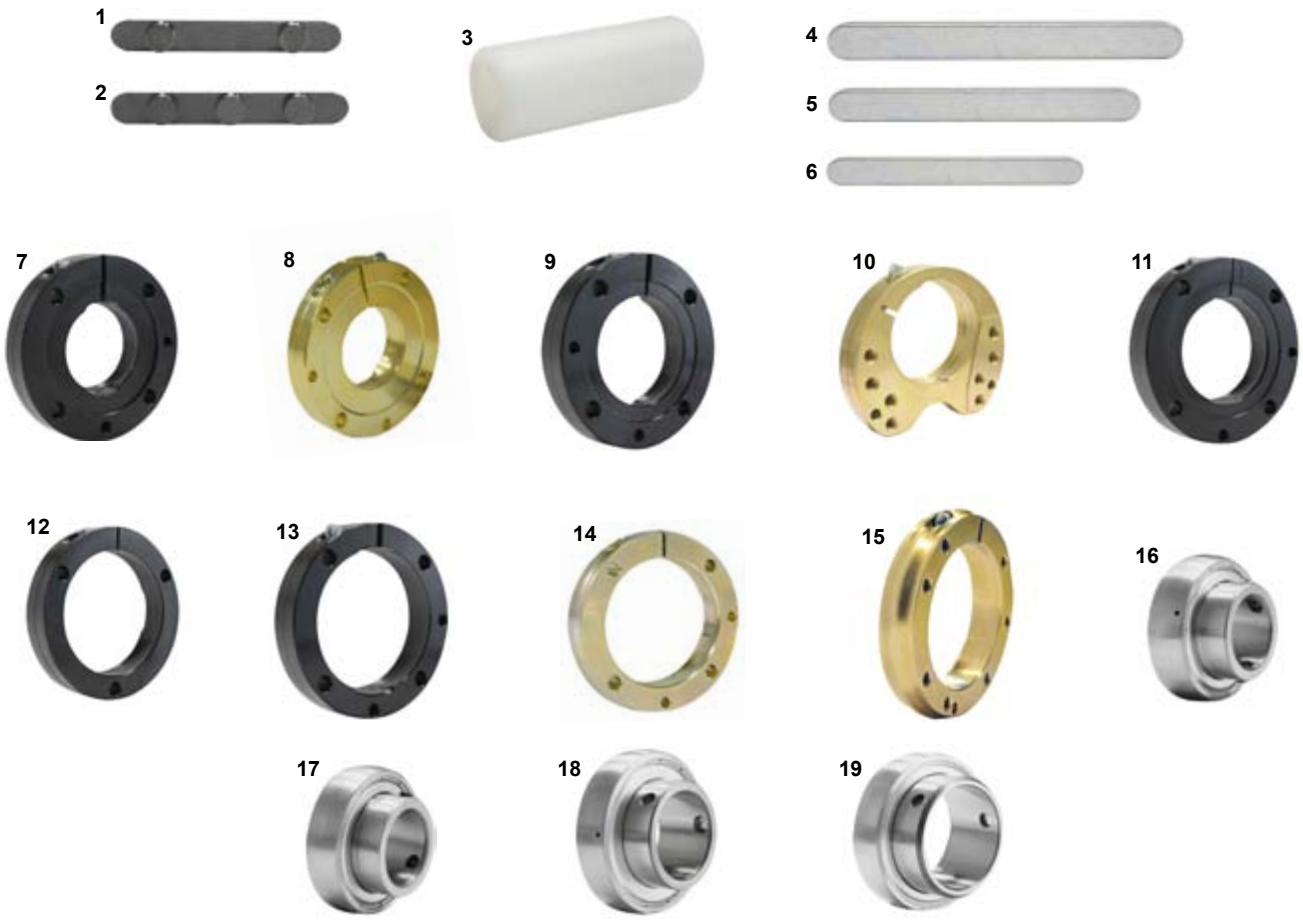

ES	COD.	DESCRIZIONE	ITEMS
1	AFS.00246	Chiavetta assale 2 pioli	Rear axle keyway 2 pins
2	AFS.00247	Chiavetta assale 3 pioli	Rear axle keyway 3 pins
3	FL1.01022	Rinforzo interno assale nylon sp.2	Nylon internal spacer sp.2
	FL1.01024	Rinforzo interno assale nylon sp.2,5	Nylon internal spacer sp.2,5
4	AFS.00665	Chiavetta 8x7x80mm mini	Keyway 8x7x80mm mini
5	AFS.00664	Chiavetta 8x7x60mm mini	Keyway 8x7x60mm mini
6	AFS.01019	Chiavetta 8x5x50mm Puffo	Keyway 8x5x50mm Puffo
7	FMN.01683	Flangia assale 25 4F mini NA completa	Axle flange 25 4H mini NA complete
8	FMG.02673	Flangia assale 25 4F mini NA3 oro comp	Axle flange 25 4H mini NA gold comp
9	FMN.01531	Flangia assale 30 4F mini NA completa	Axle flange 30 4H mini NA complete
10	FMG.00512	Flangia assale 30 mini	Axle flange 30 mini
11	FMN.02413	Flangia assale 30 4F NA3 completa	Axle flange 30 4H mini NA3 complete
12	FMN.00449	Flangia assale 40 3F completa	Axle bearing flange 40 3H complete
13	FMN.03261	Flangia assale 50 M8 ibrido completa	Axle flange 50 M8 hybrid complete
14	AFS.03261	Flangia assale magn. 50-80 M8 ibrido	Magn. axle flange 50-80 M8 hybrid
15	FMG.03418	Flangia assale 50 ibrido R-Line All. oro	Axle flange 50 hybrid R-Line Gold all.
16	AFN.00396	Cuscinetto assale 25 con grani	Axle bearing 25 grub screw
17	AFN.00655	Cuscinetto assale 30 con grani	Axle bearing 30 grub screw
18	AFN.00448	Cuscinetto assale 40 con grani	Axle bearing 40 grub screw
19	AFN.01356	Cuscinetto assale 50-80 con grani	Axle bearing 50-80 grub screw
19	AFN.00157	Cuscinetto assale 50-90 con grani	Axle bearing 50-90 grub screw
	AFN.00289	Grano M6x6 std	Grub screw M6x6 std
	AFN.01373	Grano M6x6 passo fine	Grub screw M6x6 thin pitch
	AFN.01372	Grano M8x8 cuscinetto assale 40/50	Grub screw M8x8 for axle bearing 40/50

A

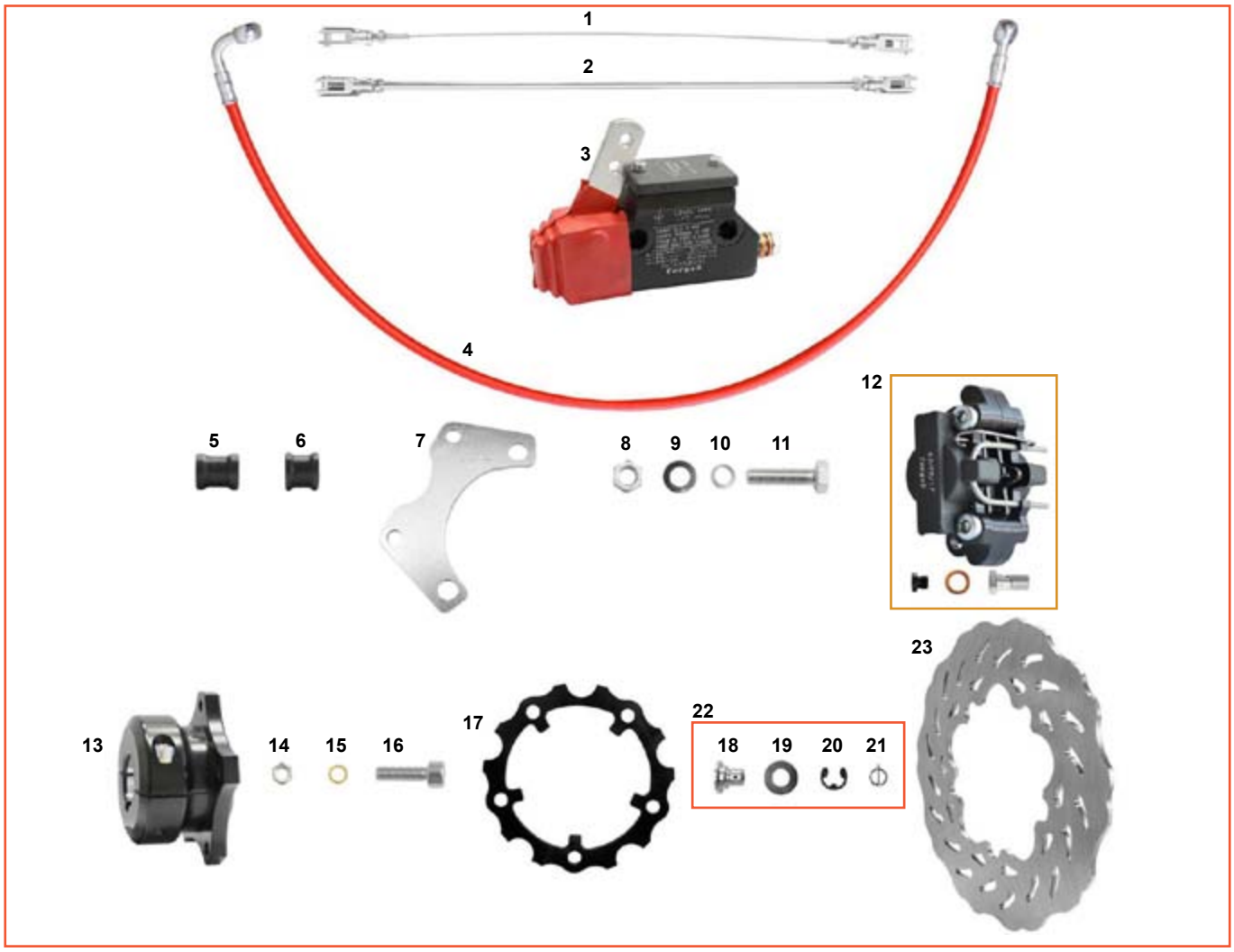

ES	COD.	DESCRIZIONE	ITEMS
A	CRG.02918	Impianto new age mini completo	Mini new age brake system complete
1	FK0.00808	Cavo freno completo cm.33 mini	Safety cable complete cm.33 mini
2	FK0.00704	Asta freno montata cm.33 mini	Brake Rod complete cm.33 mini
3	FM0.00192	Pompa freni UP/V04/V05 completa	Rear master cylinder UP/V04/V05 comp.
4	AFS.01533	Tubo freno mm 620 NA occhiello	Brake tube NA eyelet mm.620
5	FAN.01462	Spessore pinza 8,5x18x21 ibrido nero	Caliper spacer black 8,5x18x21 hybrid
6	FAN.01074	Spessore pinza 8,5x16x16 mini nero	Caliper spacer black 8,5x16x16 mini
7	FC0.03294	Piastra supporto pinza mini 2015	Brake caliper supp. mini
8	AFN.00286	Dado M 8 metalblock	Nut M 8 metalblock
9	AFN.00047	Rondella 8 ondulata	Undulated washer 8
10	FBN.00252	Spessore 8,5-14x 5 barretta	Spacer 8,5-14x 5 track rod
11	AFN.00307	Vite M 8x30 esagonale	M 8x30 hexagonal head screw
12	FM0.03259	Pinza freno mini D24 completa	Front brake caliper D24 mini complete
13	FMN.00748	Mozzo disco post. al. 30 NA/V04 comp.	Rear brake disco hub NA/V04 30 al.comp.
14	AFN.00234	Dado M 6 metalblock	Nut M 6 metalblock
15	AFN.00136	Rondella 6,5-10x1 ottone	Brass washer 6,5-10x1
16	AFN.00137	Vite M 6x35 cilindrica	M 6x35 socket head screw
17	SBN.01524	Flangia disco NA 4mm nera	Brake disc flange NA 4mm black
18	SBN.00314	Bussola disco freno new age/V04	New age brake disc bush
19	AFN.00230	Rondella disco freno elastica	Brake disc elastic washer
20	AFN.00231	Seeger D 8 disco freno	Seeger D 8 brake disc
21	AFS.00232	Spina elastica D10 disco freno	Brake disc elastic pin D10
22	FK0.00314	Bussola disco freno new age/V04 compl.	NewAge brake disc bush complete
23	SL1.01833	Disco freno mini 2015 D180	Mini 2015 brake disc D180

A

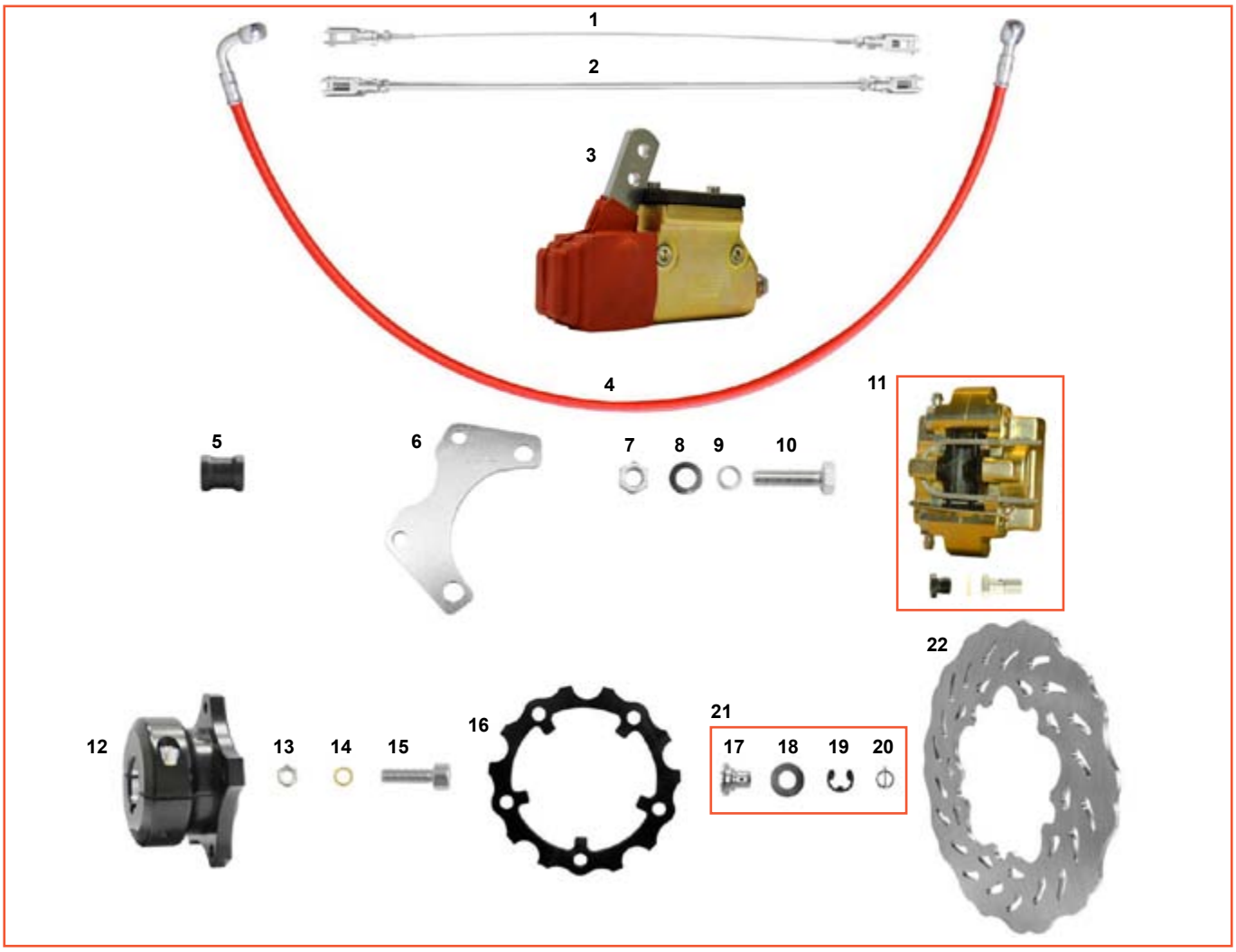

ES	COD.	DESCRIZIONE	ITEMS
A	CRG.02919	Impianto new age mini completo oro	Mini new age brake system complete gold
1	FK0.00808	Cavo freno completo cm.33 mini	Safety cable complete cm.33 mini
2	FK0.00704	Asta freno montata cm.33 mini	Brake rod complete cm.33 mini
3	FMG.00192	Pompa freni V09/10 completa oro	Rear master cylinder V09/10 comp. gold
4	AFS.01533	Tubo freno mm 620 NA occhiello	Brake tube NA eyelet mm.620
5	FAN.01462	Spessore pinza 8,5x18x21 ibrido nero	Caliper spacer black 8,5x18x21 hybrid
6	FC0.03294	Piastra supporto pinza mini 2015	Brake caliper supp. mini
7	AFN.00286	Dado M 8 metalblock	Nut M 8 metalblock
8	AFN.00047	Rondella 8 ondulata	Undulated washer 8
9	FBN.00252	Spessore 8,5-14x 5 barretta	Spacer 8,5-14x 5 track rod
10	AFN.00307	Vite M 8x 30 esagonale	M 8x 30 hexagonal head screw
11	FMG.03259	Pinza freno mini D24 completa oro	Front brake caliper D24 mini comp. gold
12	FMN.00748	Mozzo disco post. al. 30 mini comp.	Rear brake disco hub mini al.comp.
13	AFN.00234	Dado M 6 metalblock	Nut M 6 metalblock
14	AFN.00136	Rondella 6,5-10x1 ottone	Brass washer 6,5-10x1
15	AFN.00137	Vite M 6x 35 cilindrica	M 6x 35 socket head strew
16	SBN.01524	Flangia disco NA 4mm nera	Brake disc flange NA 4mm black
17	SBN.00314	Bussola disco freno mini	Mini brake disc bush
18	AFN.00230	Rondella disco freno elastica	Brake disc elastic washer
19	AFN.00231	Seeger D 8 disco freno	Seeger D 8 brake disc
20	AFS.00232	Spina elastica D10 disco freno	Brake disc elastic pin D10
21	FK0.00314	Bussola disco freno post. V05 comp.	Fear brake disc V05 bush comp.
22	SL1.01833	Disco freno mini 2015 D180	Mini 2015 brake disc D180

OKJ IMPIANTO FRENANTE V09 - BRAKE SYSTEM V09

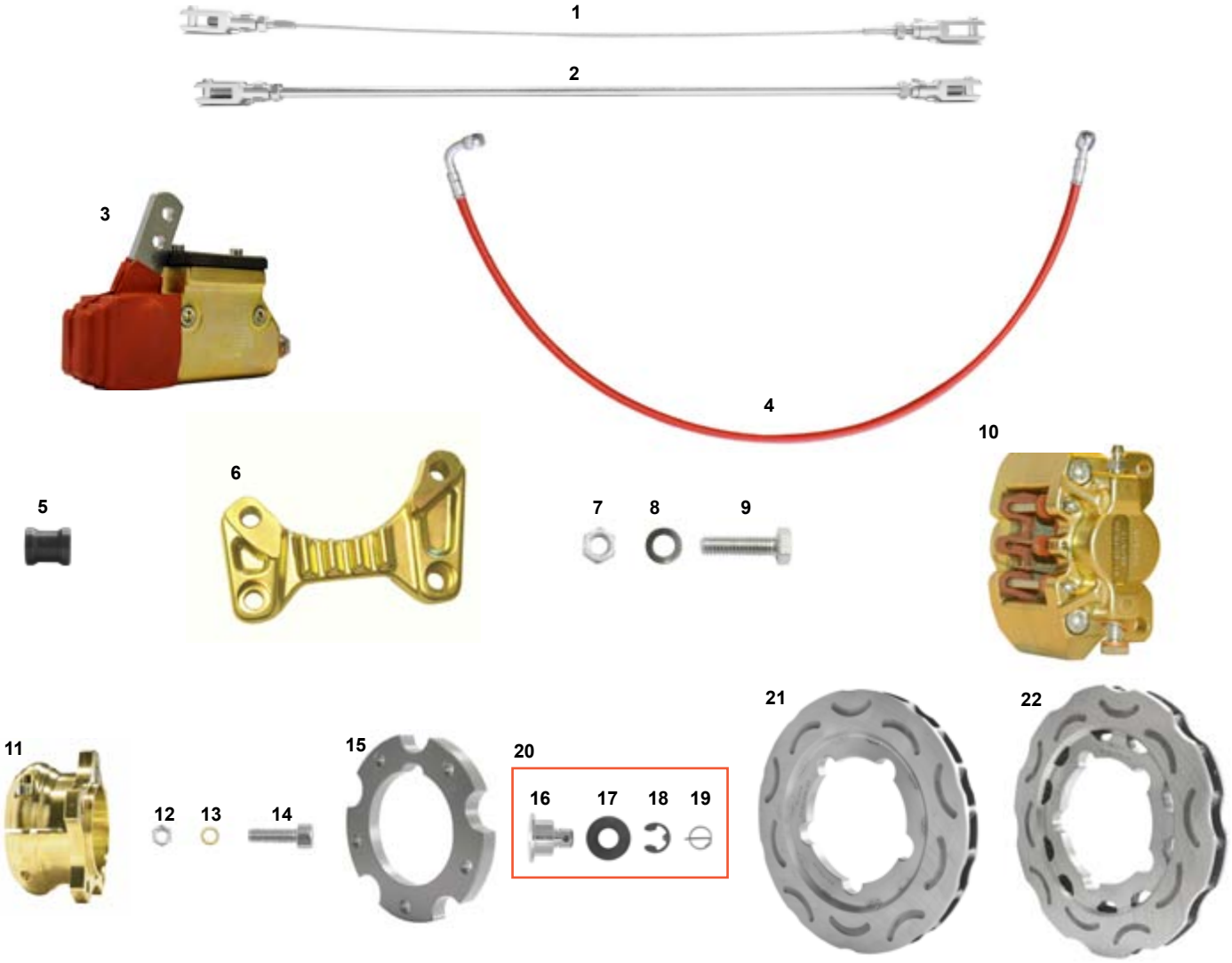

ES	COD.	DESCRIZIONE	ITEMS
	MONT.T01R	Impianto frenante OKJ V09 189 oro	Brake system OKJ V09 189 gold
	MONT.T01S	Impianto frenante OKJ V09 195 oro	Brake system OKJ V09 195 gold
	MONT.T01T	Impianto frenante OKJ V09 DUR.189 oro	Brake system OKJ V09 DUR.189 gold
1	FK0.00224	Cavo freno DD cm.41,5 ibrido	Safety cable assy cm.41,5 DD hybrid
2	FK0.00216	Asta freno DD cm.42 ibrido	Brake rod assy cm.42 DD hybrid
3	FMG.00192	Pompa freni V09/V10 completa oro	Rear master cylinder V09/V10 comp.oro
4	AFS.00240	Tubo freno 720 V09/V10 post. occ.	Brake tube V09/V10 rear eyel. 720mm
5	FAN.01462	Spessore pinza 8,5x21x18 ibrido	Caliper spacer 8,5x21x18 hybrid
6	FAG.03410	Piastra supporto pinza p. V09/10 189 oro	Caliper supp. V09/10 189 gold
7	AFN.00286	Dado M 8 metalblock	Nut M 8 metalblock
8	AFN.00047	Rondella 8 ondulata	Undulated washer 8
9	AFN.00107	Vite M 8x 25 esagonale	M 8x 25 hexagonal head screw
10	FMG.01800	Pinza freno posteriore V09/V10 comp. oro	Caliper V09/V10 complete gold
11	AFS.03414	Mozzo disco posterire 50 R-line MG	MG Rear brake disc hub 50 R-line
12	AFN.00234	Dado M 6 metalblock	Nut M 6 metalblock
13	AFN.00136	Rondella 6,5-10x1 ottone	Brass washer 6,5-10x1
14	AFN.00183	Vite M 6x 20 cilindrica	M 6x 20 socket head screw
15	SAN.01592	Flangia disco posteriore V09/10	Rear brake disc flange V09/10
16	SBN.01660	Bussola disco freno post. V09/10	Rear brake disc V09/10 bushing
17	AFN.01677	Rondella disco freno elas. V09/V10	V09/V10 rear brake disc elastic washer
18	AFN.00231	Seeger D8 disco freno	Seeger D8 brake disc
19	AFS.00232	Spina elastica D10 disco freno	Elastic pin D10 brake disc
20	FK0.01660	Bussola disco freno post. V05 comp.	Fear brake disc V05 bush comp.
21	AFS.03281	Disco freno posteriore V09/V10 189	Rear brake disc V09/V10 189
22	AFS.01727	Disco freno posteriore V09/V10 195	Rear brake disc V09/V10 195

DD IMPIANTO FRENANTE V09 - BRAKE SYSTEM V09

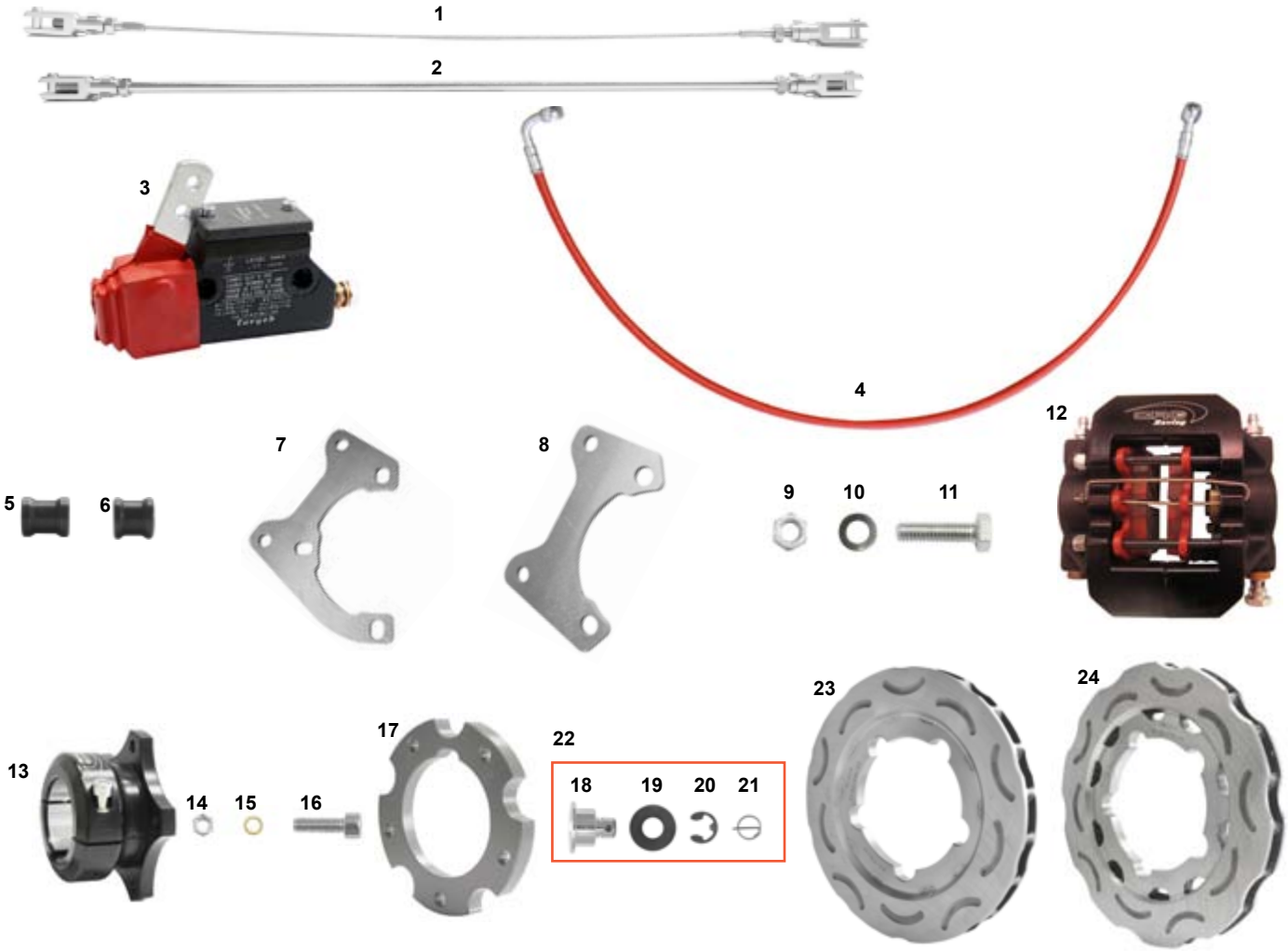

ES	COD	DESCRIZIONE	ITEMS
	MONT.T01D	Impianto frenante DD V09 189	Brake system DD V09 189
	MONT.T01C	Impianto frenante DD V09 195	Brake system DD V09 195
1	FK0.00227	Cavo freno montato KZ cm.41,5 ibrido	Safety cable assy cm.41,5 KZ hybrid
2	FK0.00223	Asta freno montata KZ cm.42 ibrido	Brake rod assy cm.42 KZ hybrid
3	FM0.00192	Pompa freni V05/V09/V10 completa	Rear master cylinder V05/V09/V10 comp.
4	AFS.00240	Tubo freno 720 V05/V09/V10 post. occ.	Brake tubeV05/V09/V10 rear eyel. 720mm
5	FAN.01462	Spessore pinza 8,5x21x18 ibrido	Caliper spacer 8,5x21x18 hybrid
6	FAN.01074	Spessore pinza 8,5x16x16 mini	Caliper spacer 8,5x16x16 mini
7	FC0.01641	Piastra supporto pinza V05/V09/V10 (195)	Caliper supp. V05/V09/V10 (195)
7	FC0.03270	Piastra supporto pinza V09/V10 (189)	Caliper supp. V09/V10 (189)
8	FC0.02869	Piastra sup. pinza passo regolabile (195)	Caliper supp. wheel base adj.(195)
8	FC0.03269	Piastra sup. pinza V09/V10 regol. (189)	Caliper supp. V09/V10 adj (189)
9	AFN.00286	Dado M 8 metalblock	Nut M 8 metalblock
10	AFN.00047	Rondella 8 ondulata	Undulated washer 8
11	AFN.00107	Vite M 8x 25 esagonale	M 8x 25 hexagonal head screw
12	FM0.01800	Pinza freno posteriore V09/V10 completa	Caliper V09/V10 complete
13	FMN.00238	Mozzo disco posterire al 50 V05 completa	Rear brake disc hub V04/V05 50 al.comp.
14	AFN.00234	Dado M 6 metalblock	Nut M 6 metalblock
15	AFN.00136	Rondella 6,5-10x1 ottone	Brass washer 6,5-10x1
16	AFN.00183	Vite M 6x 20 cilindrica	M 6x 20 socket head screw
17	SAN.01592	Flangia disco posteriore V05/V09/V10	Rear brake disc flange V05/V09/V10
18	SBN.01660	Bussola disco freno post. V05/V09/V10	Rear brake disc V05/V09/V10 bushing
19	AFN.01677	Rondella discofreno elas. V05/V09/V10	V05/V09/V10 brake disc elastic washer
20	AFN.00231	Seeger D8 disco freno	Seeger D8 brake disc
21	AFS.00232	Spina elastica D10 disco freno	Elastic pin D10 brake disc
22	FK0.01660	Bussola disco freno post. V05 comp.	Fear brake disc V05 bush comp.
23	AFS.03281	Disco freno posteriore V05/V09/V10 189	Rear brake discV05/V09/V10 189
24	AFS.01727	Disco freno posteriore V05/V09/V10 195	Rear brake disc V05/V09/V10 195

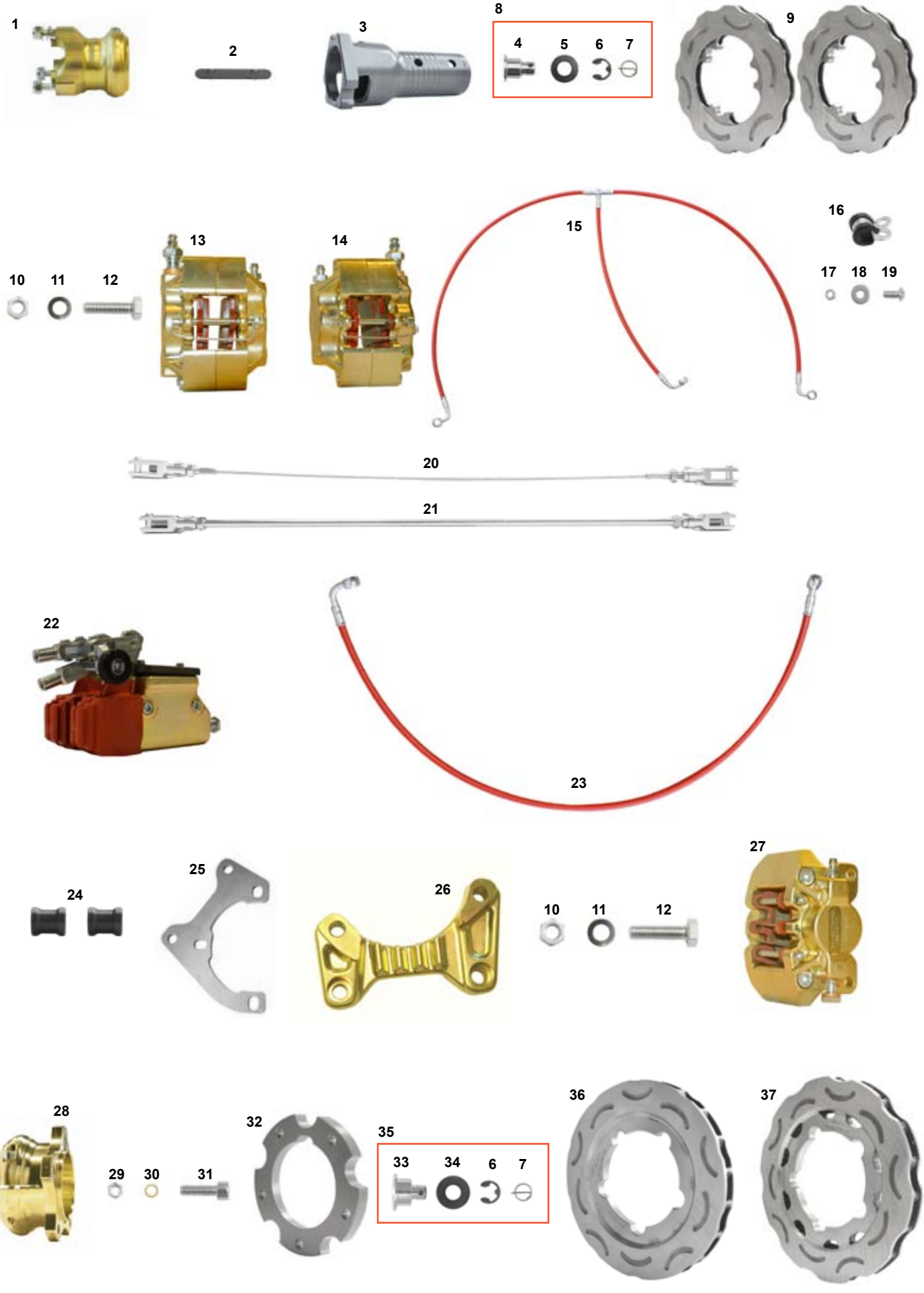
1
2
3
8
4
5
6
7
9
16
15
10
11
12
13
14
17
18
19
20
21
22
23
24
25
26
10
11
12
27
28
29
30
31
32
35
33
34
6
7
36
37

KZ IMPIANTO FRENANTE V09 - V09 BRAKE SYSTEM

ES	COD.	DESCRIZIONE	ITEMS
	MONT.T01M	Impianto frenante V09 KZ 189 oro	Brake system KZ V09 189 gold
	MONT.T01L	Impianto frenante V09 KZ 195 oro	Brake system KZ V09 195 gold
1	AFS.03412	Mozzo anteriore al. 40x80 oro	Alu front wheel hub KZ2 40x80 gold
2	AFS.00246	Chiavetta assale 2 pioli	Rear axle keyway 2 pins
3	FMN.01893	Mozzo disco ant. al KZ2 V05 25 completo	Alu front brake disc hub V05 KZ complete
4	SBN.00372	Bussola disco freno anteriore V05	Front brake disc V05 bush
5	AFN.00230	Rondella disco freno elastica altre	Rear brake disc elastic washer
6	AFN.00231	Seeger D8 disco freno	Seeger D8 brake disc
7	AFS.00232	Spina elastica D10 disco freno	Elastic pin D10 brake disc
8	FK0.00372	Bussola disco freno ant. V05 comp.	Front brake disc V05 bush compl.
9	AFS.01730	Disco freno anteriore V05 ghisa	Brake disc front V05 iron
10	AFN.00286	Dado M 8 metalblock	Nut M 8 metalblock
11	AFN.00047	Rondella 8 ondulata	Undulated washer 8
12	AFN.00827	Vite M 8x 25 cilindrica	M 8x 25 socket head screw
13	FMG.0363S	Pinza anteriore UP/V05 ghisa sx comp.oro	Front brake caliper UP/V05 iron left gold
14	FMG.0363D	Pinza anteriore UP/V05 ghisa dx comp. oro	Front brake caliper UP/V05 iron right gold
15	AFS.00336	Tubo freno tris anteriore V05/V07 occh.	Front brake hose tris V05/V07 eye.
16	AFN.00337	Fascetta ferma tubo freno	Brake tube clip
17	AFN.00360	Dado M 5 autoblock basso	Nut M 5 low self-locking
18	AFN.00361	Rondella 5,5-15x1,5	Washer 5,5-15x1,5
19	AFN.00359	Vite M 5x12 bombata	M 5x12 convex head screw
20	FK0.00227	Cavo freno montato KZ cm.41,5 ibrido	Safety cable assy cm.41,5 KZ
21	FK0.00223	Asta freno montata KZ cm.42 ibrido	Brake rod assy cm.42 KZ
22	FMG.00329	Doppia pompa UP/V04 + ripartitore KZ oro	Double master cylinder V04 with equal. gold
23	AFS.00240	Tubo freno mm 720 V05 post occhiello	Brake tube V05 rear eye. mm 720
24	FAN.01462	Spessore pinza 8,5x21x18 ibrido	Caliper spacer hybrid 8,5x21x18
25	FC0.01641	Piastra supporto pinza (195) DD/KZ	Caliper supp. (195)
26	FAG.03410	Piastra supporto pinza p. V09/10 oro	Caliper supp. V09/10 gold
27	FMG.01800	Pinza freno posteriore V09/10 oro	Rear brake caliper V09/10 gold
28	AFS.03414	Mozzo disco posteriore al. 50 R-line MG	Rear brake disc hub 50 R-line MG
29	AFN.00234	Dado M 6 metalblock	Nut M 6 metalblock
30	AFN.00136	Rondella 6,5-10x1 ottone	Brass washer 6,5-10x1
31	AFN.00183	Vite M 6x 20 cilindrica	M 6x 20 socket head screw
32	SAN.01592	Flangia disco posteriore V05	Rear brake disc flange V05
33	SBN.01660	Bussola disco freno post. V05	Rear brake disc V05 bushing
34	AFN.01677	Rondella disco freno elas. V05 posteriore	V05 rear brake disc elastic washer
35	FK0.01660	Bussola disco freno post. V05 comp.	Fear brake disc V05 bush comp.
36	AFS.03281	Disco freno posteriore V05/V09/V10 189	Rear brake disc V05/V09/V10 189
37	AFS.01727	Disco freno posteriore V05 195	Rear brake disc V05 195
	FCE.01337	Disco freno ant ceramica	Ceramic front brake disc
	FCE.01139	Disco freno post ceramica	Ceramic rear brake disc

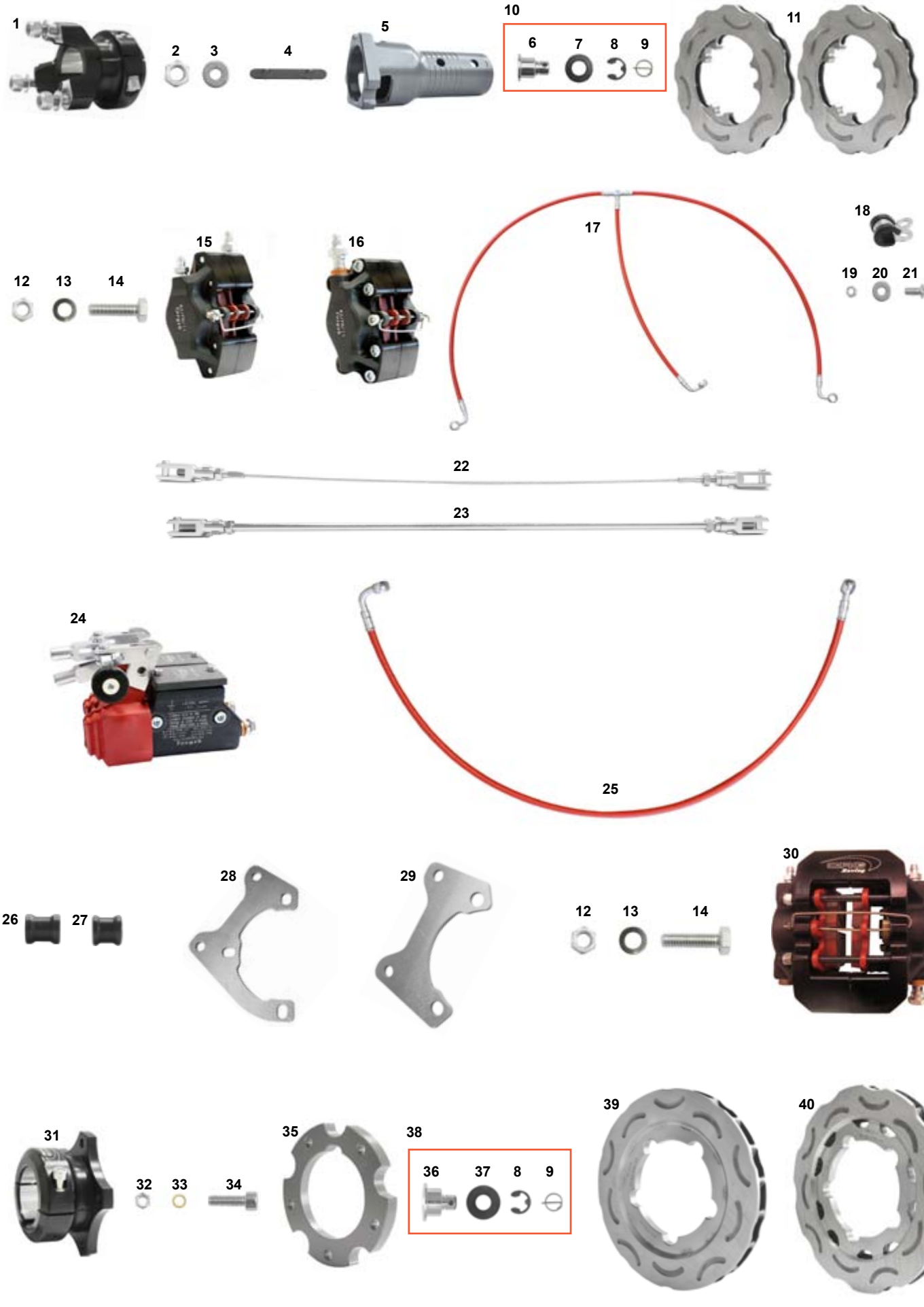
1
2
3
4
5
10
6
7
8
9
11
18
19
20
21
12
13
14
15
16
17
22
23
24
25
26
27
28
29
30
31
32
33
34
35
38
36
37
39
40

KZ IMPIANTO FRENANTE V09 - V09 BRAKE SYSTEM

ES	COD.	DESCRIZIONE	ITEMS
	MONT.T01M	Impianto frenante V09 KZ 189	Brake system KZ V09 189
	MONT.T01L	Impianto frenante V09 KZ 195	Brake system KZ V09 195
1	FMN.00321	Mozzo anteriore al. 40x 82 KZ2	Alu front wheel hub KZ2 40x82 complete
2	AFN.00058	Dado M14x1,5 autoblock	Nut M14 x 1,5 self-locking
3	AFN.01564	Rondella 15 -30x2,5	Washer 15 -30x2,5
4	AFS.00246	Chiavetta assale 2 pioli	Rear axle keyway 2 pins
5	FMN.01893	Mozzo disco ant. al KZ2 V05 25 completo	Alu front brake disc hub V05 KZ complete
6	SBN.00372	Bussola disco freno anteriore V05	Front brake disc V05 bush
7	AFN.00230	Rondella disco freno elastica altre	Rear brake disc elastic washer
8	AFN.00231	Seeger D8 disco freno	Seeger D8 brake disc
9	AFS.00232	Spina elastica D10 disco freno	Elastic pin D10 brake disc
10	FK0.00372	Bussola disco freno ant. V05 comp.	Front brake disc V05 bush compl.
11	AFS.01730	Disco freno anteriore V05 ghisa	Brake disc front V05 iron
12	AFN.00286	Dado M 8 metalblock	Nut M 8 metalblock
13	AFN.00047	Rondella 8 ondulata	Undulated washer 8
14	AFN.00107	Vite M 8x 25 esagonale	M 8x 25 hexagonal head screw
15	FM0.0363S	Pinza anteriore UP/V05 ghisa sx comp.	Front brake caliper UP/V05 iron left
16	FM0.0363D	Pinza anteriore UP/V05 ghisa dx comp.	Front brake caliper UP/V05 iron right
17	AFS.00336	Tubo freno tris anteriore V05/V07 occh.	Front brake hose tris V05/V07 eye.
18	AFN.00337	Fascetta ferma tubo freno	Brake tube clip
19	AFN.00360	Dado M 5 autoblock basso	Nut M 5 low self-locking
20	AFN.00361	Rondella 5,5-15x1,5	Washer 5,5-15x1,5
21	AFN.00359	Vite M 5x 12 bombata	M 5x 12 convex head screw
22	FK0.00227	Cavo freno montato KZ cm.41,5 ibrido	Safety cable assy cm.41,5 KZ
23	FK0.00223	Asta freno montata KZ cm.42 ibrido	Brake rod assy cm.42 KZ
24	FM0.00329	Doppia pompa UP/V04 + ripartitore KZ	Double master cylinder V04 with equal.
25	AFS.00240	Tubo freno mm 720 V05 post occhiello	Brake tube V05 rear eye. mm 720
26	FAN.01074	Spessore pinza 8,5x16x16 mini	Caliper spacer 8,5x16x16 mini
27	FAN.01462	Spessore pinza 8,5x21x18 ibrido	Caliper spacer hybrid 8,5x21x18
27	FC0.01641	Piastra supporto pinza (195)	Caliper supp. (195)
28	FC0.03270	Piastra supporto pinza V09/V10 (189)	Caliper supp. V09/V10 (189)
28	FC0.02869	Piastra sup. pinza passo regolabile (195)	Caliper supp. wheel base adj.(195)
29	FC0.03269	Piastra sup. pinza V09/V10 regol. (189)	Caliper supp. V09/V10 adj (189)
30	FM0.01800	Pinza freno posteriore V09/V10 completa	Rear brake caliper V09/V10 complete
31	FMN.00238	Mozzo disco posteriore al. 50 V05 comp.	Rear brake disc hub V04/V05 50 al.compl.
32	AFN.00234	Dado M 6 metalblock	Nut M 6 metalblock
33	AFN.00136	Rondella 6,5-10x1 ottone	Brass washer 6,5-10x1
34	AFN.00183	Vite M 6x 20 cilindrica	M 6x 20 socket head screw
35	SAN.01592	Flangia disco posteriore V05	Rear brake disc flange V05
36	SBN.01660	Bussola disco freno post. V05	Rear brake disc V05 bushing
37	AFN.01677	Rondella disco freno elas. V05 posteriore	V05 rear brake disc elastic washer
38	FK0.01660	Bussola disco freno post. V05 comp.	Fear brake disc V05 bush comp.
39	AFS.03281	Disco freno posteriore V05/V09/V10 189	Rear brake disc V05/V09/V10 189
40	AFS.01727	Disco freno posteriore V05 195	Rear brake disc V05 195

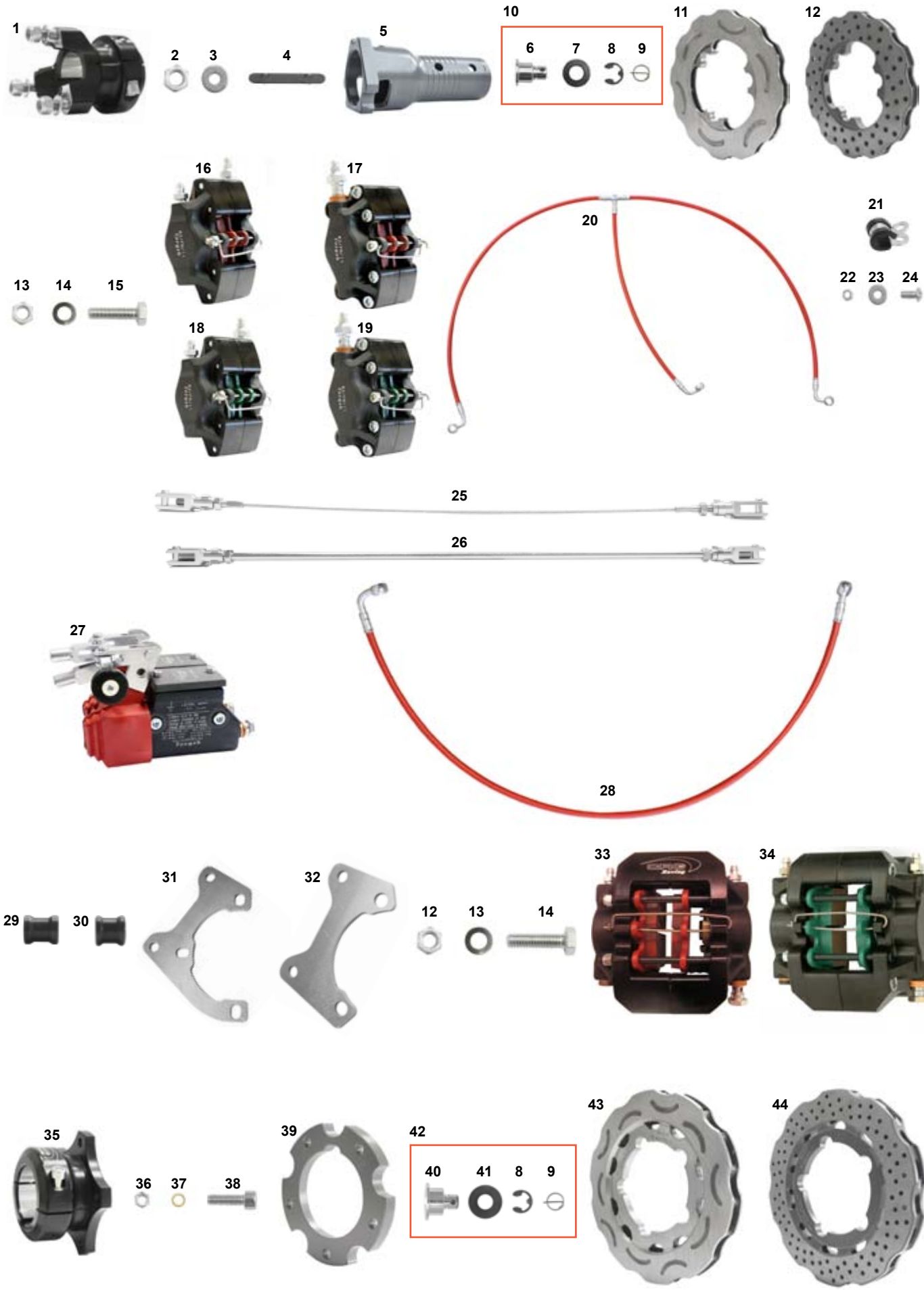
1
2
3
4
5
10
6
7
8
9
11
12
16
17
20
21
13
14
15
22
23
24
18
19
25
26
27
28
29
30
31
32
12
13
14
33
34
35
36
37
38
39
42
40
41
8
9
43
44

ES	COD.	DESCRIZIONE	ITEMS
	MONT.T01G	Impianto V05 ghisa KZ D50 completo	Brake system V05 iron KZ complete
	MONT.T01H	Impianto V05 duralcan KZ D50 completo	Brake system V05 duralcan KZ complete
1	FMN.00321	Mozzo anteriore ceramica 40x 82 KZ2	Ceramic front wheel hub KZ standard
2	AFN.00058	Dado M14x1,5 autoblock	Nut M14 x 1,5 self-locking
3	AFN.01564	Rondella 15-30x2,5	Washer 15-30x2,5
4	AFS.00246	Chiavetta assale 2 pioli	Rear axle keyway 2 pins
5	FMN.01893	Mozzo disco ant. al KZ2 25 completo	Alu. front brake disc hub KZ2 25 complete
6	SBN.00372	Bussola disco freno anteriore V05	Front brake disc V05 bush
7	AFN.00230	Rondella disco freno elastica altre	Rear brake disc elastic washer
8	AFN.00231	Seeger D8 disco freno	Seeger D8 brake disc
9	AFS.00232	Spina elastica D10 disco freno	Elastic pin D10 brake disc
10	FK0.00372	Bussola disco freno anteriore V05 compl	Front brake disc V05 bush compl.
11	AFS.01730	Freno anteriore V05 ghisa	Brake disc front V05 iron
12	FCE.01337	Disco all.V05 anteriore ceramica	Front brake disc alu ceramic
13	AFN.00286	Dado M 8 metalblock	Nut M 8 metalblock
14	AFN.00047	Rondella 8 ondulata	Undulated washer 8
15	AFN.00107	Vite M 8x 25 esagonale	M 8x 25 hexagonal head screw
16	FM0.0363S	Pinza anteriore UP/V05 ghisa sx comp.	Front brake caliper UP/V05 iron lf comp.
17	FM0.0363D	Pinza anteriore UP/V05 ghisa dx comp.	Front brake caliper UP/V05 iron rh comp.
18	FM0.1407S	Pinza anteriore UP/V05 duralcan sx comp.	Front caliper UP/V05 duralcan lf comp.
19	FM0.1407D	Pinza anteriore UP/V05 duralcan dx comp.	Front caliper UP/V05 duralcan rh comp.
20	AFS.00336	Tubo freno tris anteriore V05/V07 occh.	Front brake hose tris V05/V07 eye.
	AFN.00337	Fascetta ferma tubo freno Ø 8	Brake tube clip Ø 8
21	AFN.03912	Fascetta ferma tubo freno Ø 6	Brake tube clip Ø 6
22	AFN.00360	Dado M 5 autoblock basso	Nut M 5 low self-locking
23	AFN.00361	Rondella 5,5-15x1,5	Washer 5,5-15x1,5
24	AFN.00359	Vite M 5x 12 bombata	M 5x 12 convex head screw
25	FK0.00227	Cavo freno montato KZ cm.41,5 ibrido	Safety cable assy cm.41,5 KZ hybrid
26	FK0.00223	Asta freno montata KZ cm.42 ibrido	Brake rod assy cm.42 KZ hybrid
27	FM0.00329	Doppia pompa UP/V04 + ripartitore KZ	Double master cylinder V04 with equal.
28	AFS.00240	Tubo freno mm 720 V05 post occhiello	Brake tube V05 rear eye. mm 720
29	FAN.01074	Spessore pinza 8,5x16x16 mini	Caliper spacer 8,5x16x16 mini
30	FAN.01462	Spessore pinza 8,5x21x18 ibrido	Caliper spacer hybrid 8,5x21x18
31	FC0.01641	Piastra supporto pinza (195)	caliper supp. (195)
32	FC0.02869	Piastra sup. pinza passo regolabile (195)	Caliper support wheel base adj.(195)
33	FM0.01727	Pinza freno posteriore V05 G 32 completa	Rear brake caliper V05 iron complete
34	FM0.01678	Pinza freno posteriore V05 D 32 completa	Rear brake caliper V05 duralcan complete
35	FMN.00238	Mozzo disco posteriore al. 50 V05 comp.	Rear brake disc hub V04/V05 50 al.compl.
36	AFN.00234	Dado M 6 metalblock	Nut M 6 metalblock
37	AFN.00136	Rondella 6,5-10x1 ottone	Brass washer 6,5-10x1
38	AFN.00183	Vite M 6x 20 cilindrica	M 6x 20 socket head screw
39	SAN.01592	Flangia disco posteriore V05	Rear brake disc flange V05
40	SBN.01660	Bussola disco freno post. V05	Rear brake disc V05 bushing
41	AFN.01677	Rondella disco freno elas. V05 posteriore	V05 rear brake disc elastic washer
42	FK0.01660	Bussola disco freno post. V05	Fear brake disc V05 bush comp.
43	AFS.01727	Disco freno posteriore V05 195	Rear brake disc V05 195
44	FCE.01139	Disco freno posteriore V05 ceramica post.	Rear brake disc alu ceramic post.

DD IMPIANTO FRENANTE V05 - V05 BRAKE SYSTEM - supersport

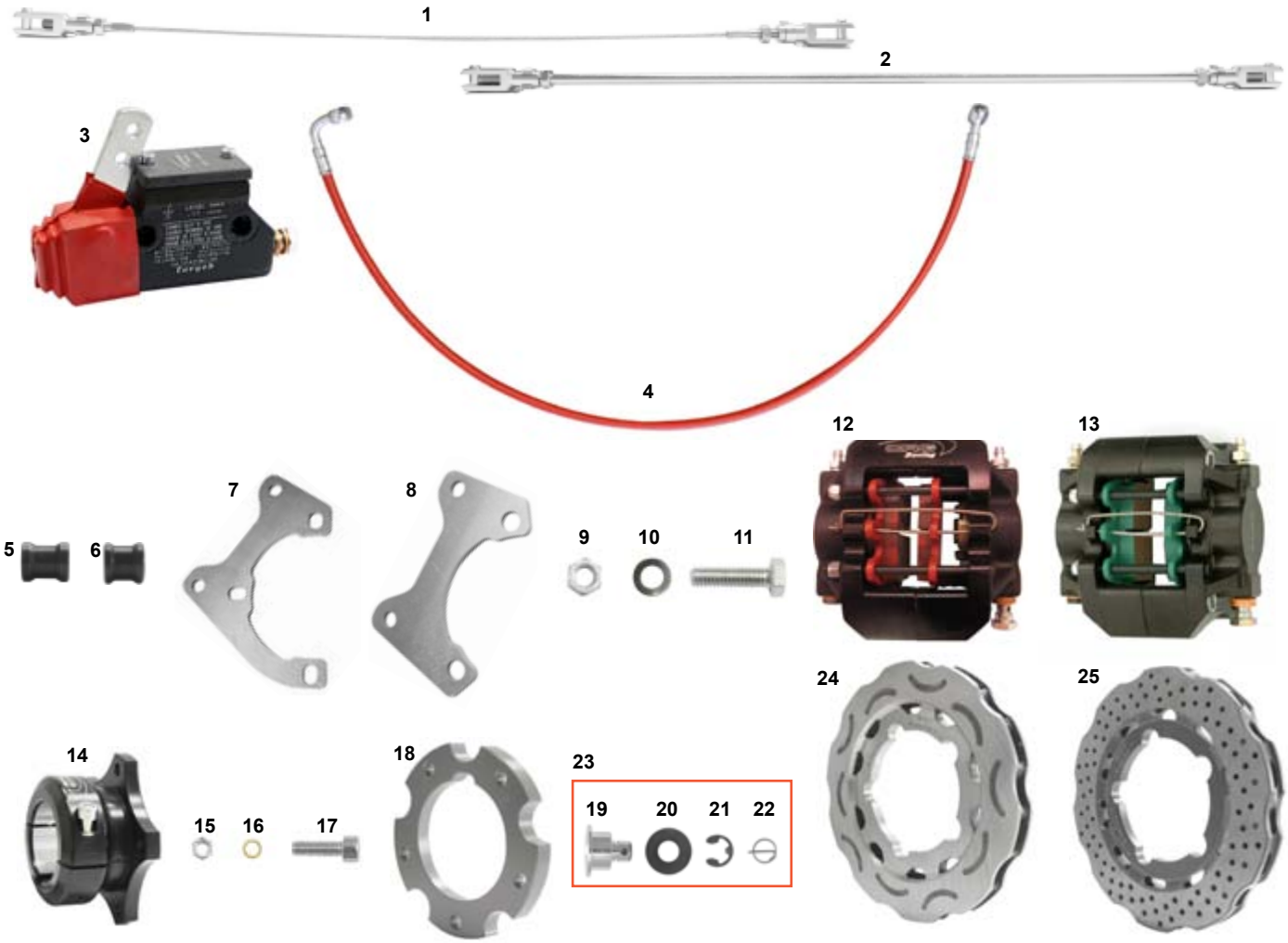

ES	COD.	DESCRIZIONE	ITEMS
	MONT.T01A	Impianto V05 ghisa post. D50 comp.	Brake system V05 iron rear complete
	MONT.T01B	Impianto V05 duralcan post. D50 comp.	Brake system V05 duralcan rear compl.
1	FK0.00227	Cavo freno montato KZ cm.41,5 ibrido	Safety cable assy cm.41,5 KZ hybrid
2	FK0.00223	Asta freno montata KZ cm.42 ibrido	Brake rod assy cm.42 KZ hybrid
3	FM0.00192	Pompa freni UP/V04/V05 completa	Rear master cylinder V05 CRG complete
4	AFS.00240	Tubo freno 720 V05 posteriore occhiello	Brake tube V05 rear eyelet 720mm
5	FAN.01462	Spessore pinza 8,5x21x18 ibrido	Caliper spacer 8,5x21x18 hybrid
6	FAN.01074	Spessore pinza 8,5x16x16 mini	Caliper spacer 8,5x16x16 mini
7	FC0.01641	Piastra supporto pinza V05	Rear brake caliper supp.
8	FC0.02869	Piastra supporto pinza V05 passo regol.	Rear brake caliper supp. wheel base adj.
9	AFN.00286	Dado M 8 metalblock	Nut M 8 metalblock
10	AFN.00047	Rondella 8 ondulata	Undulated washer 8
11	AFN.00107	Vite M 8x 25 esagonale	M 8x 25 hexagonal head screw
12	FM0.01727	Pinza freno posteriore V05 G 32 completa	Rear brake caliper V05 iron complete
13	FM0.01678	Pinza freno posteriore V05 D 32 completa	Rear brake caliper V05 duralcan complete
14	FMN.00238	Mozzo disco posteriore al. 50 V05 comp.	Rear brake disc hub V04/V05 50 al.comp.
15	AFN.00234	Dado M 6 metalblock	Nut M 6 metalblock
16	AFN.00136	Rondella 6,5-10x1 ottone	Brass washer 6,5-10x1
17	AFN.00183	Vite M 6x 20 cilindrica	M 6x 20 socket head screw
18	SAN.01592	Flangia disco posteriore V05	Rear brake disc flange V05
19	SBN.01660	Bussola disco freno posteriore V05	Rear brake disc V05 bushing
20	AFN.01677	Rondella discofreno elastica V05 post.	V05 rear brake disc elastic washer
21	AFN.00231	Seeger D8 disco freno	Seeger D8 brake disc
22	AFS.00232	Spina elastica D10 disco freno	Elastic pin D10 brake disc
23	FK0.01660	Bussola disco freno posteriore V05 compl.	Rear brake disc V05 bushing compl.
24	AFS.01727	Disco freno posteriore V05 ghisa	Rear brake disc V05 iron
25	FCE.01139	Disco all V05 posteriore ceramica	Rear brake disc alu ceramic

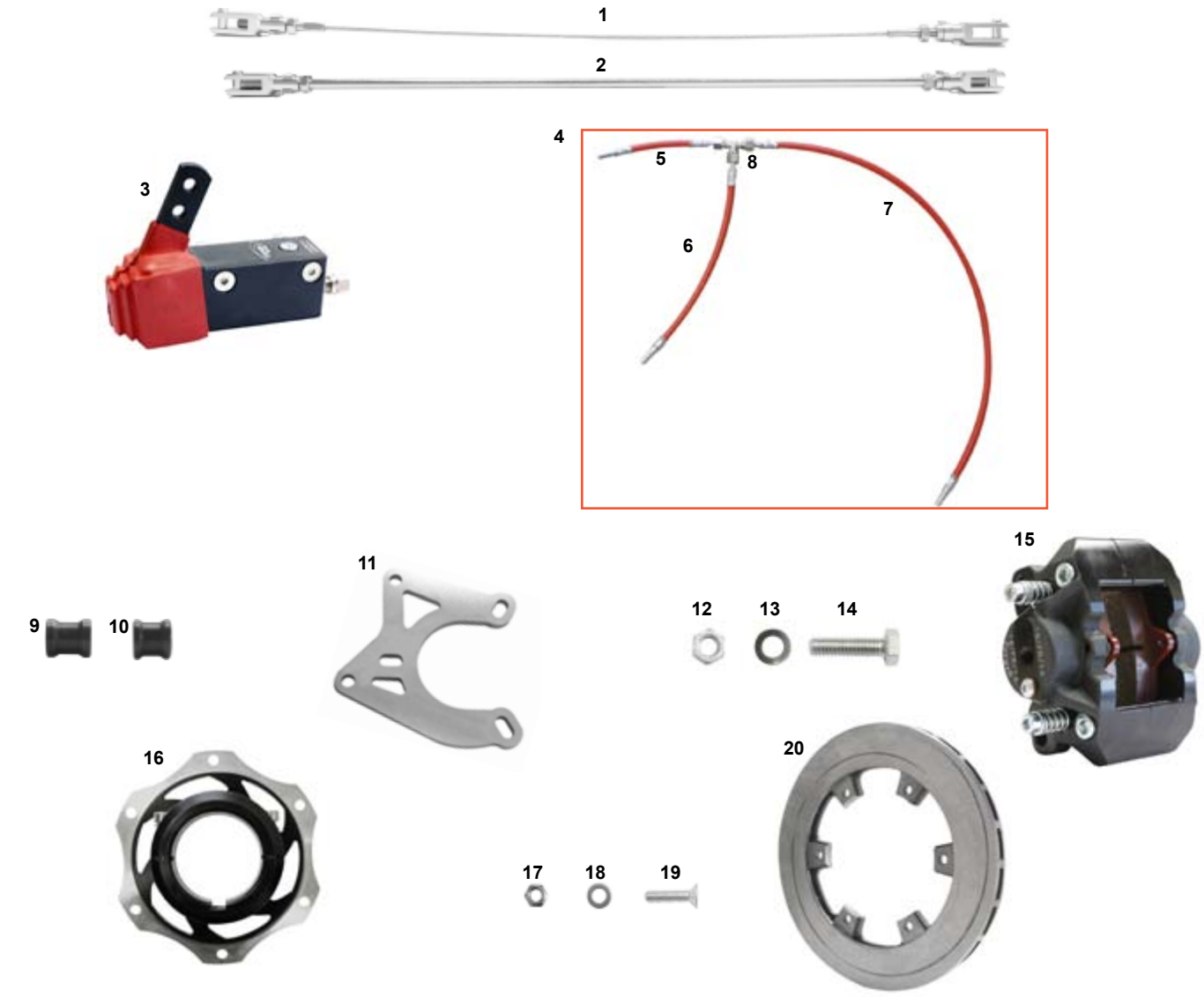

ES	COD.	DESCRIZIONE	ITEMS
	CRG.02011	Impianto V08 DD D50 completo junior	V08 DD D50 brake system complete junior
1	FK0.00227	Cavo freno montato KZ cm.41,5 ibrido	Safety cable assy cm.41,5 KZ hybrid
2	FK0.00223	Asta freno montata KZ cm.42 ibrido	Brake rod assy cm.42 KZ hybrid
3	FM0.00421	Pompa freni V08/V99 completa	Master cylinder V08/V99 complete
4	FM0.00435	Tubo freno tris posteriore V08/V99	Rear brake tube tris V08/V99
5	AFS.00428	Tubo freno mm 135	Brake tube 135mm
6	AFS.00429	Tubo freno mm 250	Brake tube 250mm
7	AFS.00430	Tubo freno mm 540	Brake tube 540mm
8	AFN.00431	Raccordo T tubo freno	Brake tube fitting T
9	FAN.01462	Spessore pinza 8,5x21x18 ibrido	Caliper spacer hybrid 8,5x21x18
10	FAN.01074	Spessore pinza 8,5x16x16 mini	Caliper spacer 8,5x16x16 mini
11	FC0.02008	Piastra supporto pinza V08 3F	Caliper supp. V08 3H
12	AFN.00286	Dado M 8 metalblock	Nut M 8 metalblock
13	AFN.00047	Rondella ondulata 8	Undulated washer 8
14	AFN.00107	Vite M 8x 25 esagonale	M 8 x 25 hexagonal head screw
15	FM0.02004	Pinza freno posteriore V08 completa	Rear brake caliper V08 complete
16	FMN.00832	Mozzo disco post. all.50 V08/V99	All. rear brake disc hub 50 V08/V99
17	AFN.00234	Dado M 6 metalblock	Nut M 6 metalblock
18	AFN.00105	Rondella 6,5-12x1,5	Washer 6,5-12x1,5
19	AFN.00295	Vite M 6x 25 svasata	M 6x 25 countersunk head screw
20	SL1.02011	Disco freno posteriore V08 completo	Brake disc rear V08 complete

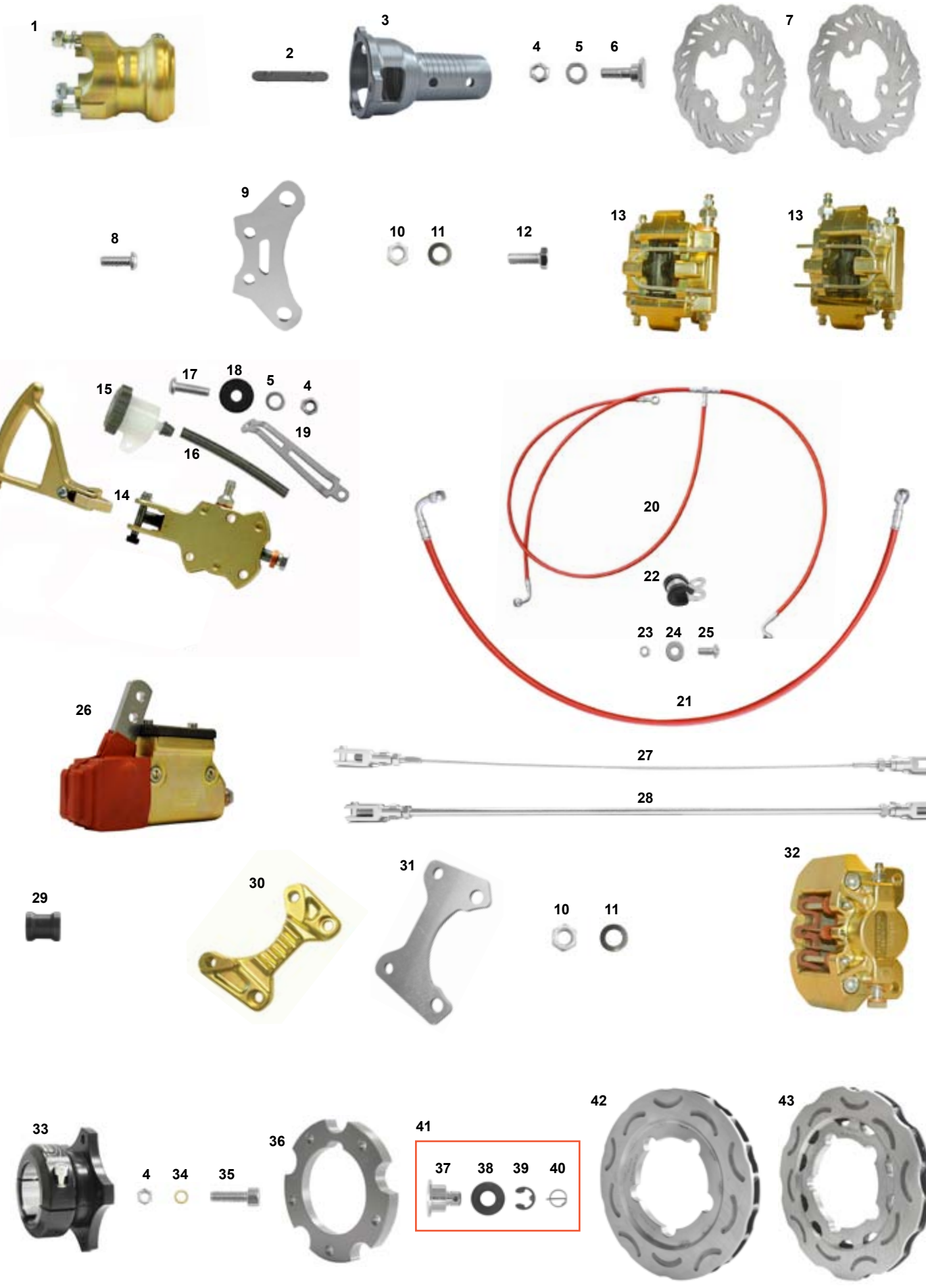
1
2
3
4
5
6
7
8
9
10
11
12
13
13
15
17
18
5
4
19
16
14
20
22
23
24
25
21
26
27
28
29
30
31
10
11
32
33
4
34
35
36
41
37
38
39
40
42
43

DD IMPIANTO FRENANTE V10 - BRAKE SYSTEM V10

ES	COD.	DESCRIZIONE	ITEMS
	MONT.T01F	Impianto frenante V10 189	Brake system V10 189
	MONT.T01E	Impianto frenante V10 195	Brake system V10 195
1	AFS.03412	Mozzo anteriore al. 40x80 KZ-DD R-line	Magn. front hub KZ-40x80 DD R-line
2	AFS.00246	Chiavetta assale 2 pioli	Rear axle keyway 2 pins
3	FM0.02876	Mozzo disco ant. al DD 25-25	Alu. front brake disc hub 25-25 DD comp.
4	AFN.00234	Dado M 6 metalblock	Nut M 6 metalblock
5	AFN.00105	Rondella 6,5-12x1,5	Washer 6,5-12x1,5
6	SBN.01866	Bussola disco freno anteriore V10	V10 brake disc bushing
7	AML.01859	Disco freno anteriore V10	Front brake disc V10
8	AFN.00502	Vite M 6x16 bombata	M 6x16 convex head screw
9	FC0.01860	Piastra supporto pinza V10 anteriore	Brake caliper support V10 chrome
10	AFN.00286	Dado M 8 metalblock	Nut M 8 metalblock
11	AFN.00047	Rondella 8 ondulata	Undulated washer 8
12	AFN.00316	Vite M 8x22 esagonale	M 8x 22 hexagonal head screw
13	FMG.03258	Pinza anteriore V10 D24 completa oro	Front brake caliper V10 D24 complete gold
14	CRG.M1909	Pompa freni anteriore V10 con leva oro	Master cylinder V10 with lever gold
15	AFS.01799	Serbatoio pompa radiale brembo	Radial pump tank brembo
16	SL1.00139	Tubo serbatoio pompa anteriore radiale	Tube master cylinder tank FBS
17	AFN.02144	Vite M 6x 20 bombata	M 6x 20 convex head screw
18	AFS.00258	Gommino pianale	Floor tray rubber
19	AML.01906	Supporto serbatoio fa	Recovery tank support
20	AFS.00862	Tubo freno tris anteriore V06 occhiello	Brake tube tris eyelet V06 front
21	AFS.00240	Tubo freno 720 V05 post. occhiello	Brake tube V05 rear eyelet 720mm
22	AFN.00337	Fascetta ferma tubo freno	Brake tube clip
23	AFN.00360	Dado M 5 autoblock basso	Nut M 5 low self-locking
24	AFN.00361	Rondella 5,5-15x1,5	Washer 5,5-15x1,5
25	AFN.00359	Vite M 5x 12 bombata	M 5x 12 convex head screw
26	FMG.00192	Pompa freni V09/10 CRG completa oro	Rear master cylinder V09/10 CRG comp gold
27	FK0.00224	Cavo freno montato DD cm.41,5 X2	Safety cable assy cm.41,5 DD X2
28	FK0.00216	Asta freno montata DD cm.42 X2	Brake rod assy cm.42 DD X2
29	FAN.01462	Spessore pinza 8,5x21x18 ibrido	Caliper spacer 8,5x21x18 hybrid
OPZ. 30	FAG.03410	Piastra supporto pinza p. V09/10 oro	Caliper supp. V09/10 gold
OPZ. 31	FC0.02869	Piastra sup. pinza passo regolabile (195)	Caliper supp. wheel base adj.(195)
32	FMG.01800	Pinza freno posteriore V09/10 completa oro	Rear brake caliper V09/10 complete gold
33	AFS.03414	Mozzo disco posteriore al. 50 R-line	Rear brake disc hub 50 al. comp. R-line
34	AFN.00136	Rondella 6,5-10x1 ottone	Brass washer 6,5-10x1
35	AFN.00183	Vite M 6x 20 cilindrica	M 6x 20 socket head screw
36	SAN.01592	Flangia disco posteriore V05	Rear brake disc flange V05
37	SBN.01660	Bussola disco freno post. V05	Rear brake disc V05 bushing
38	AFN.01677	Rondella discofreno elas. V05 posteriore	V05 rear brake disc elastic washer
39	AFN.00231	Seeger D8 disco freno	Seeger D8 brake disc
40	AFS.00232	Spina elastica D10 disco freno	Elastic pin D10 brake disc
41	FK0.01660	Bussola disco freno posteriore V05 compl.	Rear brake disc V05 bushing compl.
42	AFS.03281	Disco freno posteriore 09/10 189	Rear brake disc V09/10 189
OPZ. 43	AFS.01727	Disco freno posteriore V05 195	Rear brake disc V05 195
	FC0.01641	Piastra supporto pinza (195)	Caliper supp. (195)
	AFN.00287	Rondella 8,5-14x1,5 speciale	Washer 8,5-14x1,5 special

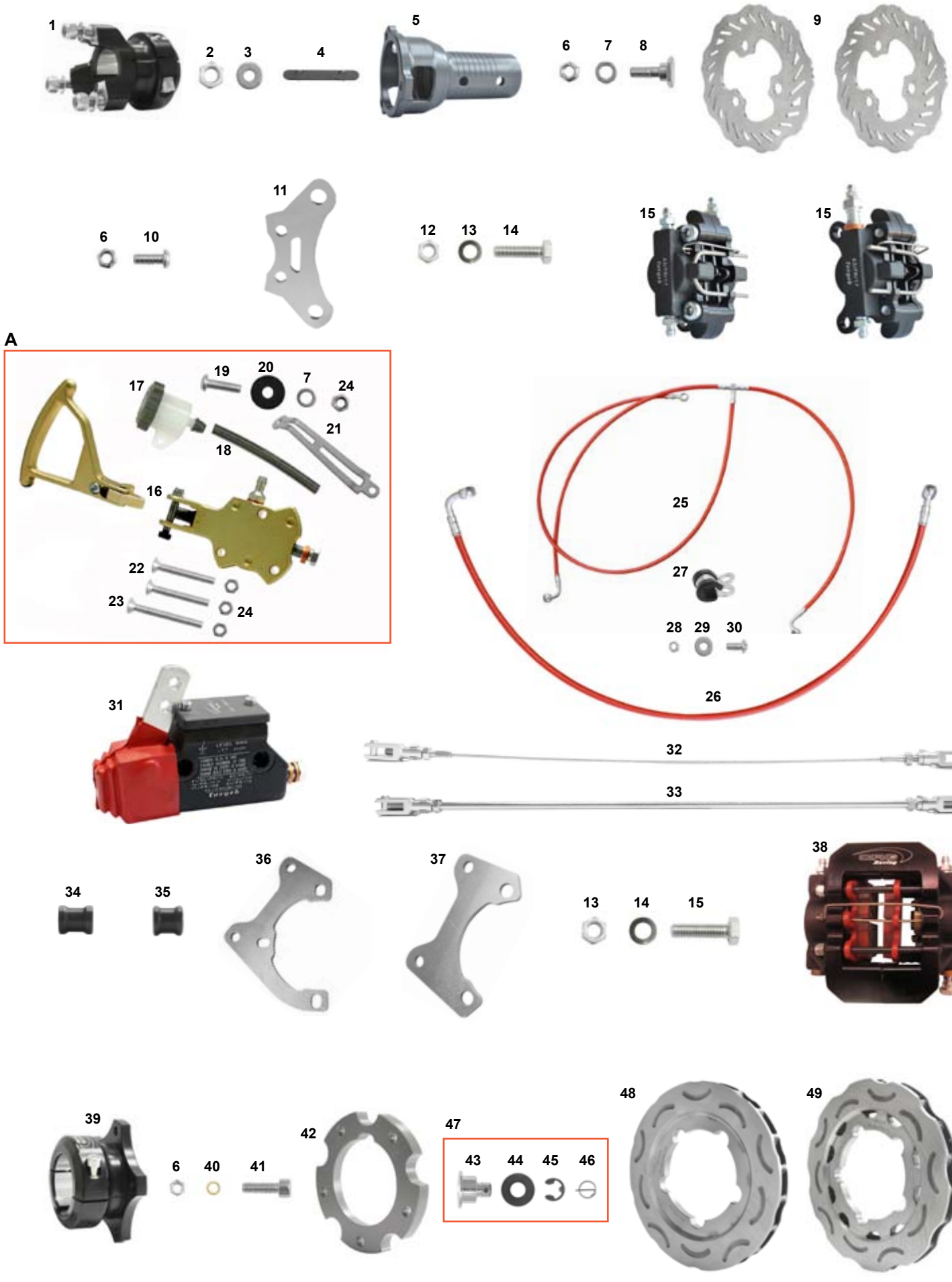
1
2
3
4
5
6
7
8
9
6
10
11
12
13
14
15
15
A
17
19
20
7
24
21
18
16
22
23
24
25
27
28
29
30
26
31
32
33
34
35
36
37
13
14
15
38
39
6
40
41
42
47
43
44
45
46
48
49

DD IMPIANTO FRENANTE V10 - BRAKE SYSTEM V10

ES	COD.	DESCRIZIONE	ITEMS
A	CRG.03980	Pompa freni ant. V10 oro compl. leva	Master cylinder V10 gold comp. W/Lever
	MONT.T01F	Impianto frenante V10 189	Brake system V10 189
	MONT.T01E	Impianto frenante V10 195	Brake system V10 195
1	FMN.00321	Mozzo anteriore al. 40x 82 KZ2	Alu front wheel hub KZ standard complete
2	AFN.00058	Dado M14x1,5 autoblock	Nut M14 x 1,5 self-locking
3	AFN.01564	Rondella 15-30x2,5	Washer 15-30x2,5
4	AFS.00246	Chiavetta assale 2 pioli	Rear axle keyway 2 pins
5	FM0.02876	Mozzo disco ant. al DD 25-25	Alu. front brake disc hub 25-25 DD comp.
6	AFN.00234	Dado M 6 metalblock	Nut M 6 metalblock
7	AFN.00105	Rondella 6,5-12x1,5	Washer 6,5-12x1,5
8	SBN.01866	Bussola disco freno anteriore V06	V06 brake disc bushing
9	AML.01859	Disco freno anteriore V06	Front brake disc V06
10	AFN.00502	Vite M 6x 16 bombata	M 6x 16 convex head screw
11	FC0.01860	Piastra supporto pinza V06 anteriore	Brake caliper support V06 chrome
12	AFN.00286	Dado M 8 metalblock	Nut M 8 metalblock
13	AFN.00047	Rondella 8 ondulata	Undulated washer 8
14	AFN.00107	Vite M 8x 25 esagonale	M 8x 25 hexagonal head screw
15	FM0.03258	Pinza anteriore V10 D24 completa	Front brake caliper V10 D24 complete
16	FK0.01909	Pompa freni anteriore V06 con leva	Master cylinder V06 with lever
17	AFS.01799	Serbatoio pompa radiale brembo	Radial pump tank brembo
18	SL1.00139	Tubo serbatoio pompa anteriore radiale	Tube master cylinder tank FBS
19	AFN.02144	Vite M 6x 20 bombata	M 6x 20 convex head screw
20	AFS.00258	Gommino pianale	Floor tray rubber
21	AML.01906	Supporto serbatoio fa	Recovery tank support
22	AFN.00294	Vite M 6x 45 svasata	M 6x 45 countersunk head screw
23	AFN.02960	Vite M 6x 55 svasata	M 6x 55 countersunk head screw
24	AFN.00106	Dado M 6 autob. basso	Nut M 6 low self-locking
25	AFS.00862	Tubo freno tris anteriore V06 occhiello	Brake tube tris eyelet V06 front
26	AFS.00240	Tubo freno 720 V05 post. occhiello	Brake tube V05 rear eyelet 720mm
27	AFN.00337	Fascetta ferma tubo freno	Brake tube clip
28	AFN.00360	Dado M 5 autoblock basso	Nut M 5 low self-locking
29	AFN.00361	Rondella 5,5-15x1,5	Washer 5,5-15x1,5
30	AFN.00359	Vite M 5x 12 bombata	M 5x 12 convex head screw
31	FM0.00192	Pompa freni UP/V04/V05 completa	Rear master cylinder V05 complete
32	FK0.00224	Cavo freno montato DD cm.41,5 X2	Safety cable assy cm.41,5 DD X2
33	FK0.00216	Asta freno montata DD cm.42 X2	Brake rod assy cm.42 DD X2
34	FAN.01462	Spessore pinza 8,5x21x18 ibrido	Caliper spacer 8,5x21x18 hybrid
35	FAN.01074	Spessore pinza 8,5x16x16 mini	Caliper spacer 8,5x16x16 mini
36	FC0.01641	Piastra supporto pinza (195)	Caliper supp. (195)
36	FC0.03270	Piastra supporto pinza V09/V10 (189)	Caliper supp. V09/V10 (189)
37	FC0.02869	Piastra sup. pinza passo regolabile (195)	Caliper supp. wheel base adj.(195)
37	FC0.03269	Piastra sup. pinza V09/V10 regol. (189)	Caliper supp. V09/V10 adj (189)
38	FM0.01800	Pinza freno posteriore V09/V10 completa	Rear brake caliper V09/V10 complete
39	FMN.00238	Mozzo disco posteriore al. 50 V05 comp.	Rear brake disc hub V04/V05 50 al. comp.
40	AFN.00136	Rondella 6,5-10x1 ottone	Brass washer 6,5-10x1
41	AFN.00183	Vite M 6x 20 cilindrica	M 6x 20 socket head screw
42	SAN.01592	Flangia disco posteriore V05	Rear brake disc flange V05
43	SBN.01660	Bussola disco freno post. V05	Rear brake disc V05 bushing
44	AFN.01677	Rondella discofreno elas. V05 posteriore	V05 rear brake disc elastic washer
45	AFN.00231	Seeger D8 disco freno	Seeger D8 brake disc
46	AFS.00232	Spina elastica D10 disco freno	Elastic pin D10 brake disc
47	FK0.01660	Bussola disco freno posteriore V05 compl.	Rear brake disc V05 bushing compl.
48	AFS.03281	Disco freno posteriore V05/09/10 189	Rear brake disc V05/09/10 189
49	AFS.01727	Disco freno posteriore V05 195	Rear brake disc V05 195

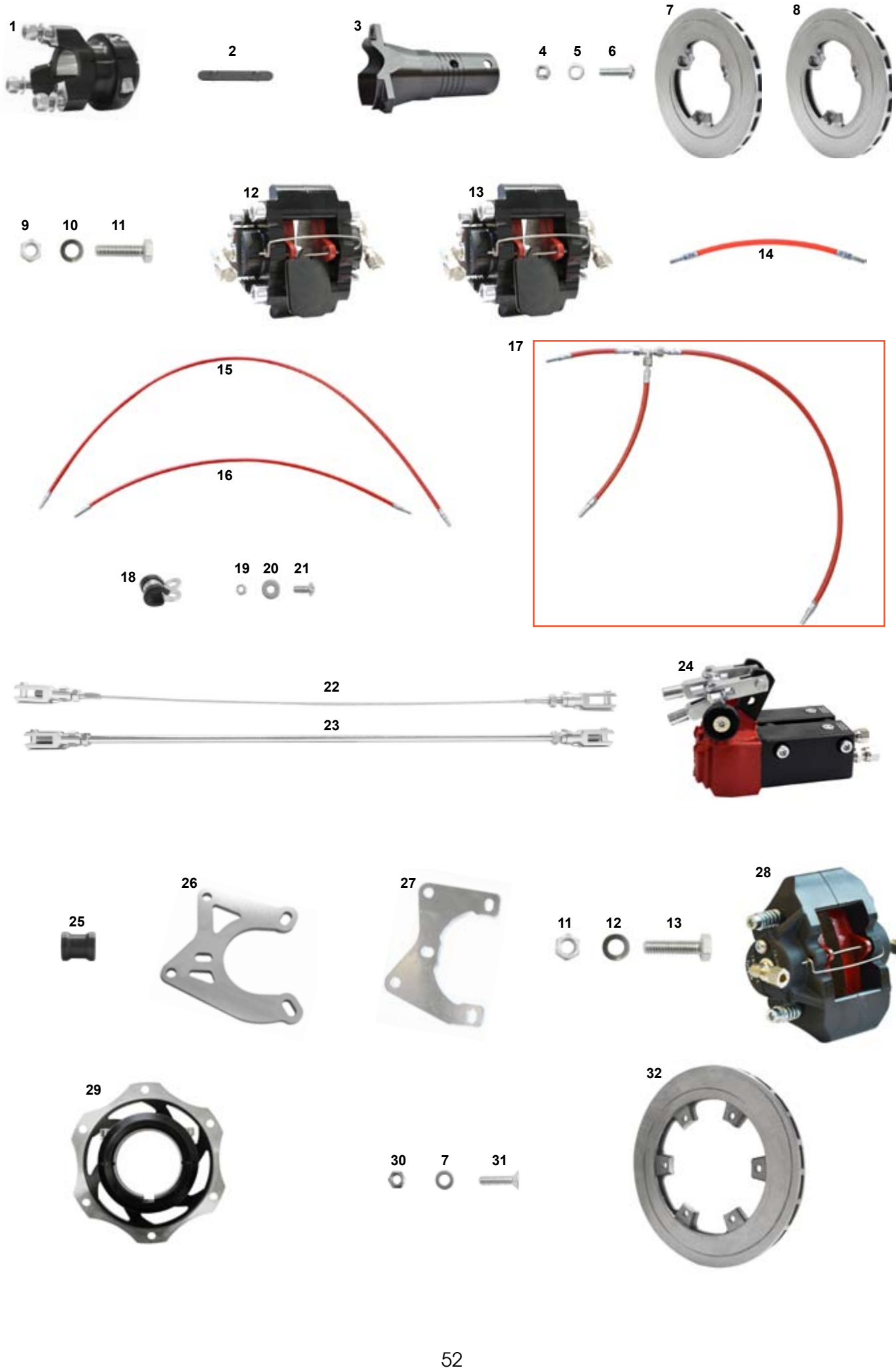
1
2
3
4
5
6
7
8
9
10
11
12
13
14
15
16
17
18
19
20
21
22
23
24
25
26
27
11
12
13
28
29
30
7
31
32

KZ IMPIANTO FRENANTE V08 - BRAKE SYSTEM V08

ES	COD.	DESCRIZIONE	ITEMS
	CRG.02003	Impianto V08 KZ/D50 completo	V08 KZ/D50 brake system complete
1	FMN.00321	Mozzo anteriore all. 40x 82 KZ2	Alu. front wheel hub KZ2 40x82 complete
2	AFS.00246	Chiavetta assale 2 pioli	Rear axle keyway 2 pins
3	FM0.02018	Mozzo disco ant. fe.KZ2 V08 17-17 comp.	Iron front brake disc hubV08 17-17 comp.
4	AFN.00234	Dado M 6 metalblock	Nut M 6 metalblock
5	AFN.00105	Rondella 6,5-12x1,5	Washer 6,5-12x1,5
6	AFN.02144	Vite M 6x 20 bombata	M 6x 20 covex head screw
7	SL1.2012D	Disco freno anteriore V08 destro	Brake disc front V08 right
8	SL1.2012S	Disco freno anteriore V08 destro	Brake disc front V08 left
9	AFN.00286	Dado M 8 metalblock	Nut M 8 metalblock
10	AFN.00047	Rondella 8 ondulata	Undulated washer 8
11	AFN.00107	Vite M 8x 25 esagonale	M 8 x 25 hexagonal head screw
12	FM0.2005D	Pinza anteriore V08 destra completa	Front brake caliper V08 right complete
13	FM0.2005S	Pinza anteriore V08 sinistra completa	Front brake caliper V08 left complete
14	AFS.00429	Tubo freno mm 250 ant .V08 codolo	Brake tube 250mm tongs hold
15	AFS.00487	Tubo freno mm 1080 ant .V08 codolo	Brake tube 1080mm tongs hold
16	AFS.00488	Tubo freno mm 670 ant .V08 codolo	Brake tube 670mm tongs hold
17	FM0.00435	Tubo freno tris post.V08/V99	Rear brake tube tris V08/V99
18	AFN.00337	Fascetta ferma tubo freno	Brake tube clip
19	AFN.00360	Dado M 5 autoblock basso	Nut M 5 low self-locking
20	AFN.00361	Rondella 5,5-15x1,5	Washer 5,5-15x1,5
21	AFN.00359	Vite M 5x 12 bombata	M 5x 12 convex head screw
22	FK0.00227	Cavo freno montato KZ cm.41,5 ibrido	Safety cable assy cm.41,5 KZ hybrid
23	FK0.00223	Asta freno montata KZ cm.42 ibrido	Brake rod assy cm.42 KZ hybrid
24	FM0.00485	Doppia pompa V08-V99 c/ripartitore	2 Mastercyl.V08-V99 w/equa.KZ
25	FAN.01462	Spessore pinza 8,5x21x18 ibrido	Caliper spacer hybrid 8,5x21x18
26	FC0.02008	Piastra supporto pinza V08 3F	Caliper supp. V08 3H
27	FC0.02013	Piastra supporto pinza V08 ibrido	Caliper supp. V08 HyB
28	FM0.02004	Pinza freno posteriore V08 completa	Rear brake caliper V08 complete
29	FMN.00832	Mozzo disco post. all.50 V08/V99	All. rear brake disc hub 50 V08/V99
30	AFN.00234	Dado M 6 metalblock	Nut M 6 metalblock
31	AFN.00295	Vite M 6x 25 svasata	M 6x 25 countersunk head screw
32	SL1.02011	Disco freno posteriore V08 completo	Brake disc rear V08 complete

M PINZA FRENO MINI D24 COMPL. ORO - BRAKE CALIPER D24 GOLD

DD PINZA ANTERIORE V10 ORO - REAR BRAKE CALIPER V10 GOLD

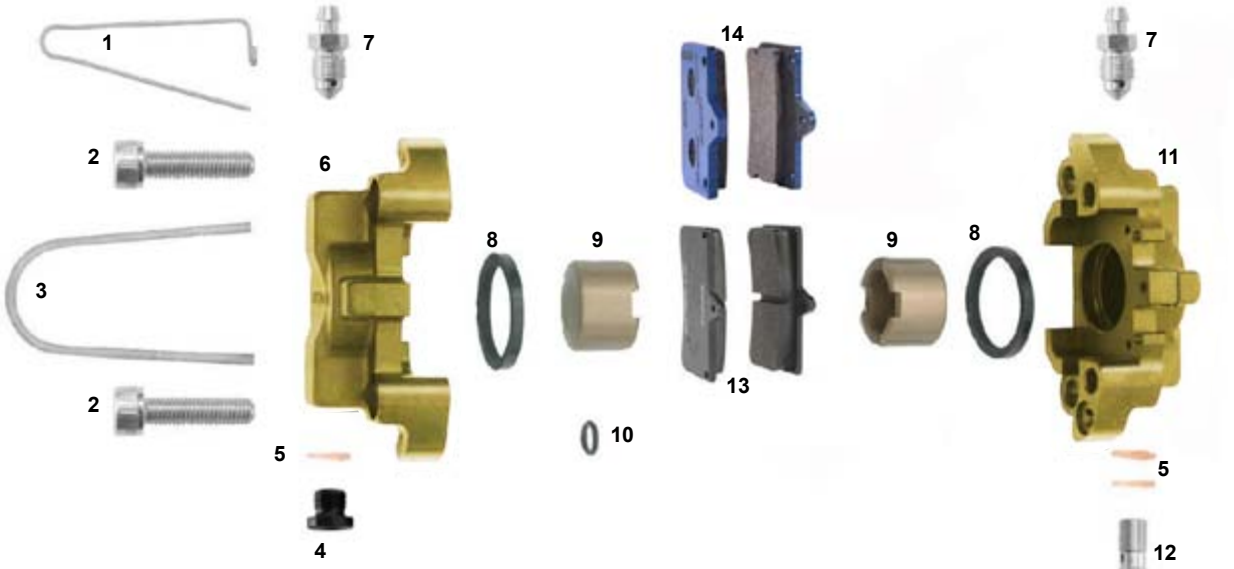

A

B

ES	COD.	DESCRIZIONE	ITEMS
A	FMG.03259	Pinza freno mini D24 completa oro	Front brake caliper D24 assy gold
B	CRG.03259	Kit revisione pinza mini	Revision kit mini brake caliper
1	AFS.00187	Spina sicurezza anteriore V09/10	Safety pin V09/10
2	AFN.02153	Vite M 8x 35 cilindrica	M 8x 35 socket head screw
3	AFS.00181	Spina blocca pastiglia pinza anteriore	Brake pad block pin V06
4	SBN.00369	Tappo M10 V09/10	Caliper Cap M10 V09/10
5	AFN.00186	Rondella 10,5-14x2 rame	Copper washer 10,5-14x2
6	SAG.03258	Semi pinza ant. BK-10 24 oro dx-sx	Half brake caliper BK-10 24 right-left gold
7	SZ0.00184	Spurgo M10 V09/10	Bleeder M10 V09/10
8	AFS.03166	Gommino pinza anteriore V10 24	Piston seal V10 24 front
9	SD1.03260	Pistoncino pinza V10 24	Brake piston V10 24 front
10	AFN.03814	Or pinza V09/10	O-ring caliper V09/10
11	SAG.03259	Semi pinza ant. V10 orecchiette dx/sx	Half brake caliper V10 24 rear rh/lf
12	SZ0.00185	Raccordo M10 V09/10	Fitting M10 V09/10
13	AFS.00306	Pastiglia freno anteriore V04/V06	Front brake pad V04/V06 std
OPZ. 14	AFS.03325	Pastiglia freno anteriore V10-mini azzurra	Front brake pad blue V10-mini

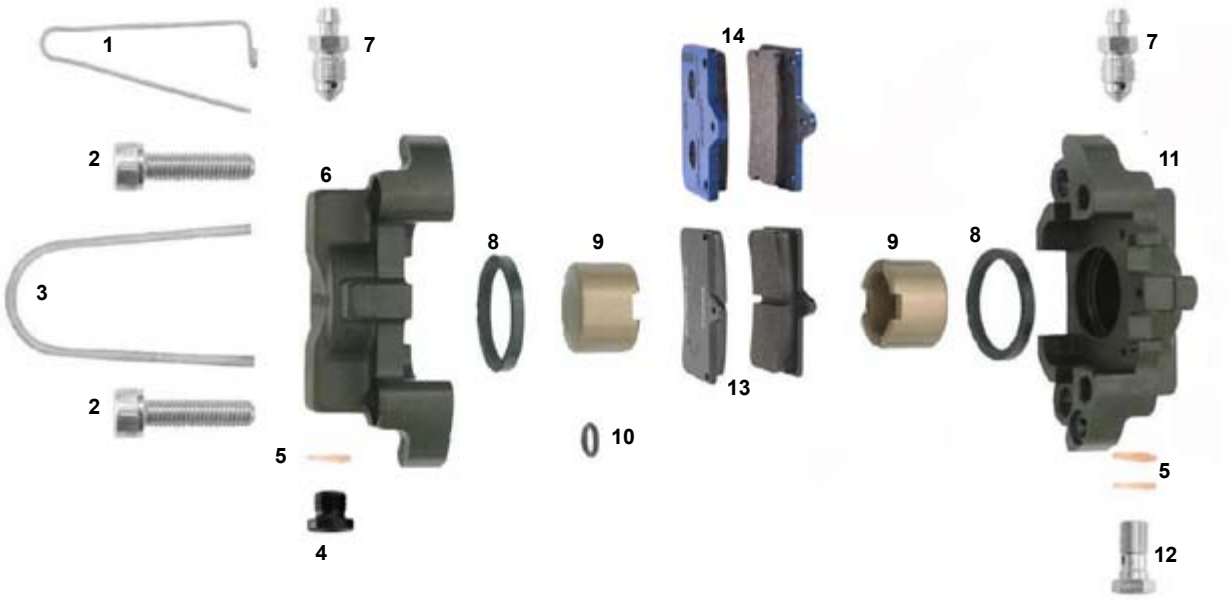

A

B

ES	COD.	DESCRIZIONE	ITEMS
A	FM0.03259	Pinza freno mini D24 completa	Front brake caliper V10 assy
B	CRG.03259	Kit revisione pinza mini	Revision kit mini brake caliper
1	AFS.00187	Spina sicurezza anteriore UP/V04/V05	Safety pin UP/V04/V05
2	AFN.02153	Vite M 8x 35 cilindrica	M 8x 35 socket head screw
3	AFS.00181	Spina blocca pastiglia pinza anteriore	Brake pad block pin V06
4	SBN.00369	Tappo M10 UP/V04/V05	Caliper Cap M10 UP/V04/V05
5	AFN.00186	Rondella 10,5-14x2 rame	Copper washer 10,5-14x2
6	SAN.03258	Semi pinza ant. BK-10 24 nera dx-sx	Half brake caliper BK-10 24 right-left
7	SZ0.00184	Spurgo M10 UP/V04/V05	Bleeder M10 UP/V04/V05
8	AFS.03166	Gommino pinza anteriore V10 24	Piston seal V10 24 front
9	SD1.03260	Pistoncino pinza V10 24	Brake piston V10 24 front
10	AFN.03814	Or pinza UP/V04/V05	O-ring caliper UP/V04/V05
11	SAN.03259	Semi pinza ant. V10 orecchiette dx/sx	Half brake caliper V10 24 rear rh/lf
12	SZ0.00185	Raccordo M10 UP/V04/V05	Fitting M10 UP/V04/V05
13	AFS.00306	Pastiglia freno anteriore V04/V06	Front brake pad V04/V06 std
14	AFS.03325	Pastiglia freno anteriore V10-mini azzurra	Front brake pad blue V10-mini

KZ PINZA POSTERIORE V09 ORO - REAR BRAKE CALIPER V09 GOLD

OKJ PINZA POSTERIORE V09 ORO - REAR BRAKE CALIPER V09 GOLD

DD PINZA POSTERIORE V10 ORO - REAR BRAKE CALIPER V10 GOLD

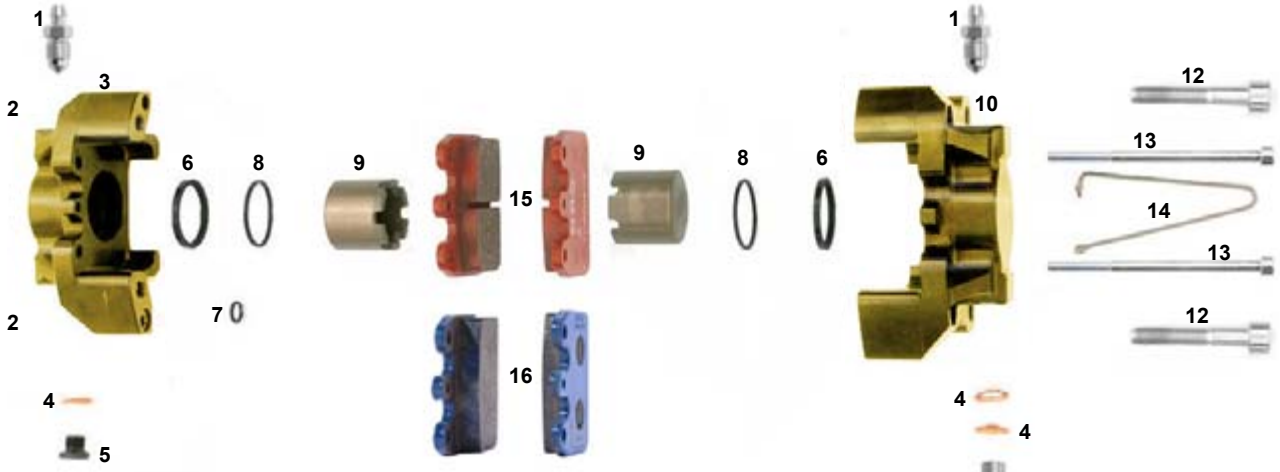

A

B

ES	COD.	DESCRIZIONE	ITEMS
A	FMG.01800	Pinza freno posteriore V09/V10 oro	Rear brake caliper V09/V10 gold
B	CRG.03022	Kit revisione pinza posteriore V09	Revision kit rear brake caliper V09
1	SZ0.00184	Spurgo M10	Bleeder M10
2	AFN.00360	Dado M 5 autoblock basso	Nut M 5 low self-locking
3	SAG.1800D	Semi pinza posteriore V09/V10 30 dx oro	Half rear brake caliper V09/V10 30 gold
4	AFN.00186	Rondella 10,5-14x2 rame	Copper washer 10,5-14x2
5	SBN.00369	Tappo M10 V09/V10	Caliper cap M10 V09/V10
6	AFS.03022	Gommino pinza posteriore V09	Rear brake caliper seal V09
7	AFN.00182	Or pinza V09/V10	O-ring caliper V09/V10
8	AFS.03023	Gommino parapolvere	Dust guard seal
9	SD1.01801	Pistoncino pinza V09/V10 posteriore	Rear brake caliper piston V09/V10
10	SAG.1800S	Semi pinza posteriore V09/10 30 sx oro	Half rear brake caliper V09/10 30 left gold
11	SZ0.00185	Raccordo M10 V09/V10	Fitting M10 V09/V10
12	AFN.00159	Vite M 8x 45 cilindrica	M 8x 45 socket head screw
13	AFN.01679	Vite M 5x 80 cilindrica	M 5x 80 socket head screw
14	AFS.01682	Spina sicurezza pinza posteriore	Rear safety pin
15	AFS.01745	Pastiglia freno posteriore V05 rossa	Rear brake pad V05 iron red
OPZ. 16	AFS.03307	Pastiglia freno post. V05-09 azzurra	Rear brake pad V05-09 blue

DD PINZA POSTERIORE V09 - REAR BRAKE CALIPER V09

KZ PINZA POSTERIORE V09 - REAR BRAKE CALIPER V09

DD PINZA POSTERIORE V10 - REAR BRAKE CALIPER V10

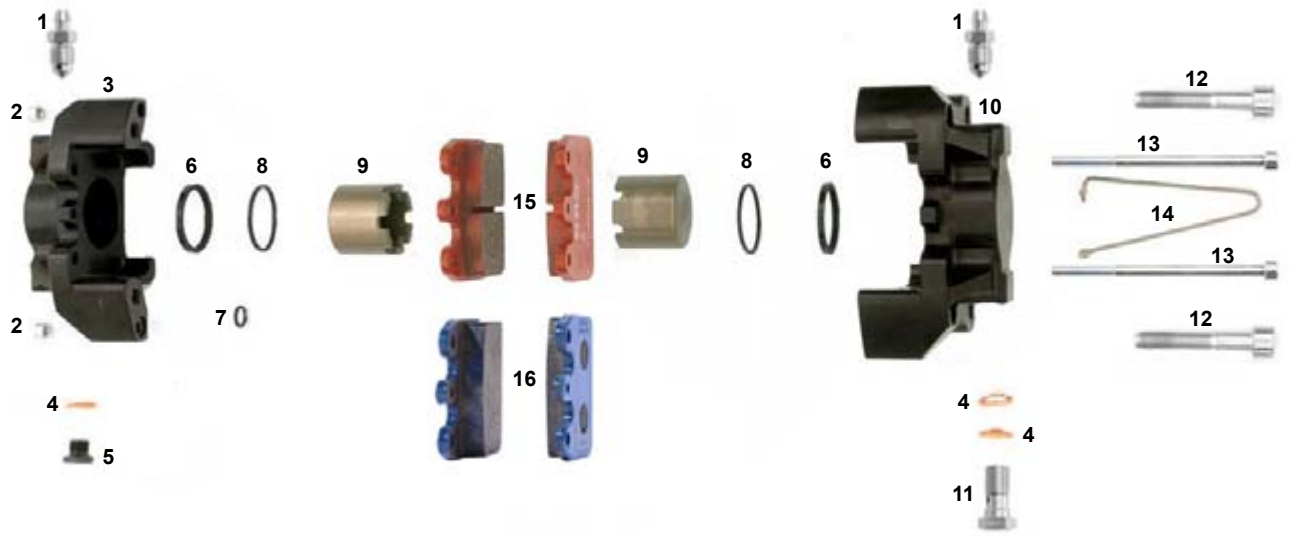

A

B

ES	COD.	DESCRIZIONE	ITEMS
A	FM0.01800	Pinza freno posteriore V09/V10 completa	Rear brake caliper V09/V10 complete
B	CRG.03022	Kit revisione pinza posteriore V09	Revision kit rear brake caliper V09
1	SZ0.00184	Spurgo M10	Bleeder M10
2	AFN.00360	Dado M 5 autoblock basso	Nut M 5 low self-locking
3	SAN.1800D	Semi pinza posteriore V09/V10 30 dx nera	Half rear brake caliper V09/V10 30 right
4	AFN.00186	Rondella 10,5-14x2 rame	Copper washer 10,5-14x2
5	SBN.00369	Tappo M10 V09/V10	Caliper cap M10 V09/V10
6	AFS.03022	Gommino pinza posteriore V09	Rear brake caliper seal V09
7	AFN.00182	Or pinza V09/V10	O-ring caliper V09/V10
8	AFS.03023	Gommino parapolvere	Dust guard seal
9	SD1.01801	Pistoncino pinza V09/V10 posteriore	Rear brake caliper piston V09/V10
10	SAN.1800S	Semi pinza posteriore V09/V10 30 sx nera	Half rear brake caliper V09/V10 30 left
11	SZ0.00185	Raccordo M10 V09/V10	Fitting M10 V09/V10
12	AFN.00159	Vite M 8x 45 cilindrica	M 8x 45 socket head screw
13	AFN.01679	Vite M 5x 80 cilindrica	M 5x 80 socket head screw
14	AFS.01682	Spina sicurezza pinza posteriore	Rear safety pin
15	AFS.01745	Pastiglia freno posteriore V05 rossa	Rear brake pad V05 iron red
16	AFS.03307	Pastiglia freno post. V05-09 azzurra	Rear brake pad V05-09 blue

KZ PINZA ANTERIORE V09 ORO - FRONT BRAKE CALIPER V09 GOLD

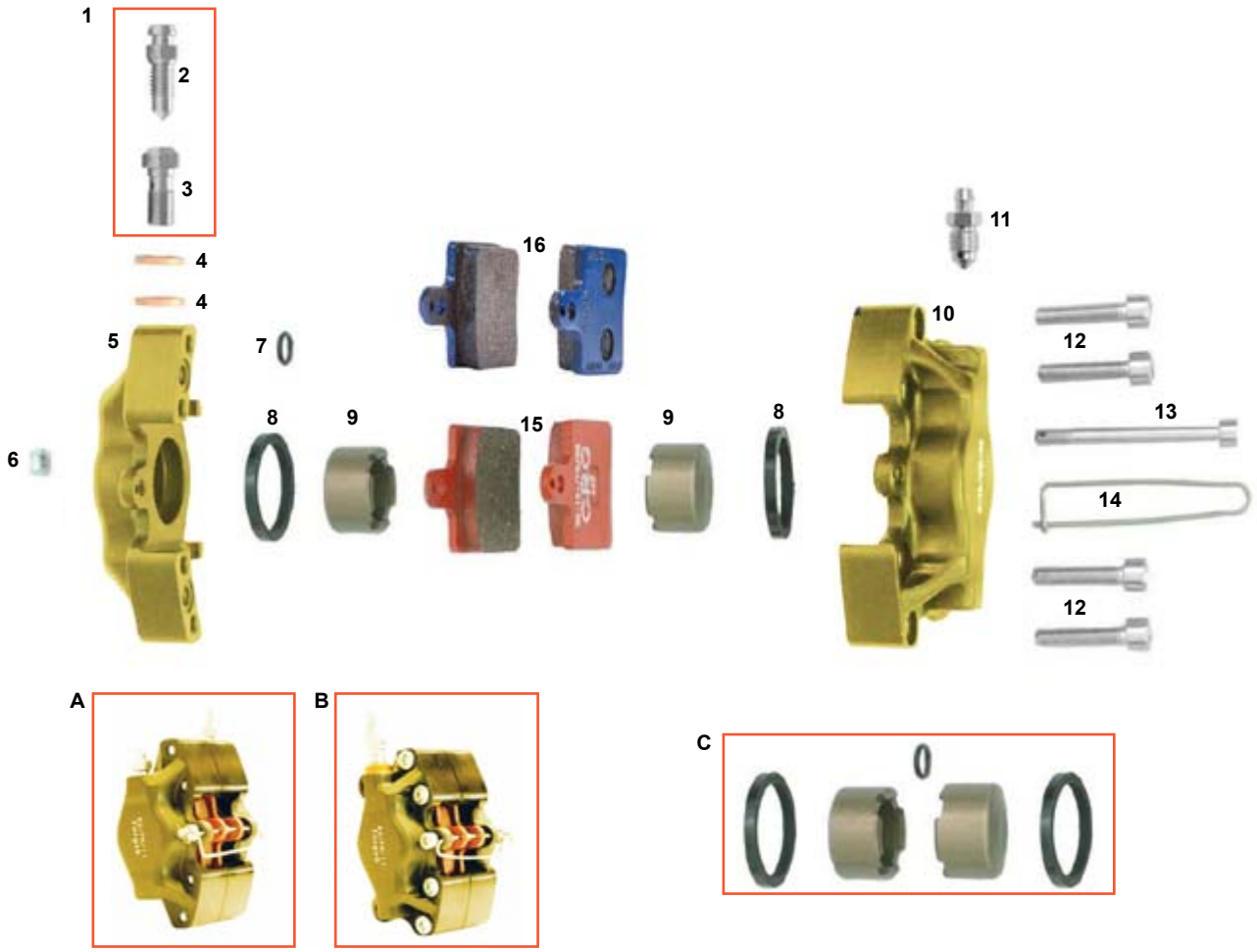

ES	COD.	DESCRIZIONE	ITEMS
A	FMG.0363S	Pinza ant. UP/V05 ghisa sx comp. oro	Front brake caliper UP/V05 iron left gold
B	FMG.0363D	Pinza ant. UP/V05 ghisa dx comp. oro	Front brake caliper UP/V05 iron right gold
C	CRG.00364	Kit revisione pinza anteriore UP/V05	Revision kit front brake caliper V05
1	FM0.00308	Raccordo combinato completo	Bleeder fitting complete
2	SZ0.00309	Spurgo M 6 UP/V04/V05	Bleeder M 6 UP/V04/V05
3	SZ0.00308	Raccordo combinato M10	Bleeder fitting
4	AFN.00186	Rondella 10,5-14x2 rame	Copper washer 10,5-14x2
5	SAG.0365D	Semi pinza ant. V05/UP con orecc. dx oro	Half caliper UP/V05 front right gold
5	SAG.0364D	Semi pinza ant. V05/UP destra oro	Half caliper UP/V05 front right black gold
6	AFN.00360	Dado M 5 autoblock basso	Nut M 5 low self-locking
7	AFN.03814	Or pinza UP/V04/V05	O-ring caliper UP/V04/V05
8	AFS.00179	Gommino pinza anteriore V05/UP	Piston seal front UP/V05
9	SD1.00370	Pistoncino pinza V05/V08 anteriore oro	V05/V08 front brake caliper piston
10	SAG.0365S	Semi pinza ant. V05/UP con orecc. sx oro	Half caliper UP/V05 front left gold
11	SAG.0364S	Semi pinza ant. V05/UP sinistra oro	Half caliper UP/V05 front left gold
11	SZ0.00184	Spurgo M10 UP/V04/V05	Bleeder M10 UP/V04/V05
12	AFN.00368	Vite M 6x 40 cilindrica	M 6x 40 socket head screw
13	AFN.00367	Vite M 5x 55 cilindrica	M 5x 55 socket head screw
14	AFS.00187	Spina sicurezza anteriore V05/UP/V04	Safety pin UP/V04/V05 front
15	AFS.02997	Pastiglia freno ant. V05 g/post.	Brake pad rear UP/ front V05 220
16	AFS.03308	Pastiglia freno ant. V05-09 SP07azzurra	SP07 special front pads blue V05-V09

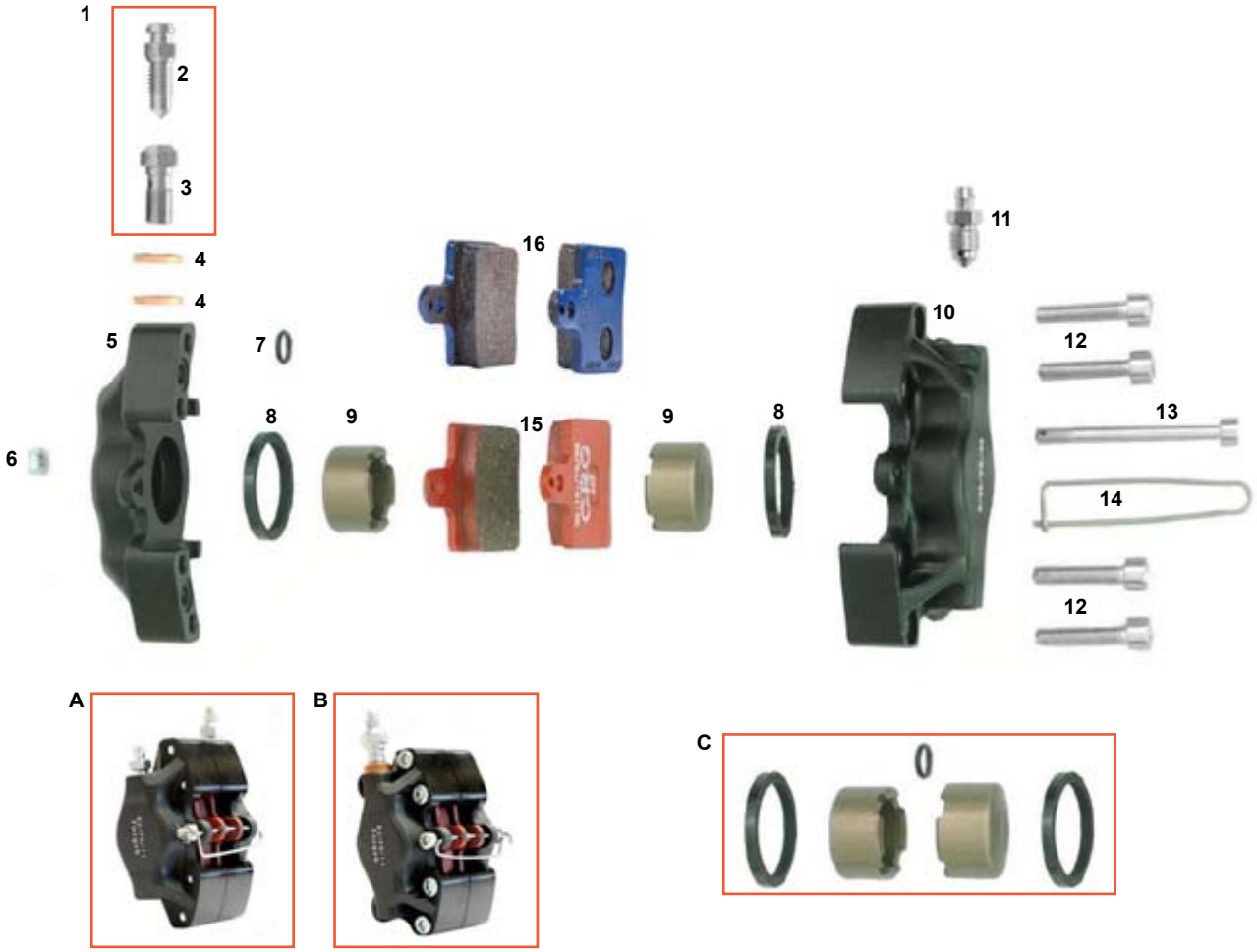

ES	COD.	DESCRIZIONE	ITEMS
A	FM0.0363S	Pinza anteriore UP/V05 ghisa sx comp.	Front brake caliper UP/V05 iron left
B	FM0.0363D	Pinza anteriore UP/V05 ghisa dx comp.	Front brake caliper UP/V05 iron right
C	CRG.00364	Kit revisione pinza anteriore UP/V05	Revision kit front brake caliper V05
1	FM0.00308	Raccordo combinato completo	Bleeder fitting complete
2	SZ0.00309	Spurgo M 6 UP/V04/V05	Bleeder M 6 UP/V04/V05
3	SZ0.00308	Raccordo combinato M10	Bleeder fitting
4	AFN.00186	Rondella 10,5-14x2 rame	Copper washer 10,5-14x2
5	SDN.0365D	Semi pinza ant. V05/UP con orecc. dx	Half caliper UP/V05 front right
5	SDN.0364D	Semi pinza ant. V05/UP destra	Half caliper UP/V05 front right black
6	AFN.00360	Dado M 5 autoblock basso	Nut M 5 low self-locking
7	AFN.03814	Or pinza UP/V04/V05	O-ring caliper UP/V04/V05
8	AFS.00179	Gommino pinza anteriore V05/UP	Piston seal front UP/V05
9	SD1.00370	Pistoncino pinza V05/V08 anteriore	V05/V08 front brake caliper piston
10	SDN.0365S	Semi pinza ant. V05/UP con orecc. sx	Half caliper UP/V05 front left
11	SDN.0364S	Semi pinza ant. V05/UP sinistra	Half caliper UP/V05 front left black
11	SZ0.00184	Spurgo M10 UP/V04/V05	Bleeder M10 UP/V04/V05
12	AFN.00368	Vite M 6x40 cilindrica	M 6x40 socket head screw
13	AFN.00367	Vite M 5x 55 cilindrica	M 5x 55 socket head screw
14	AFS.00187	Spina sicurezza anteriore V05/UP/V04	Safety pin UP/V04/V05 front
15	AFS.02997	Pastiglia freno ant. V05 g/post. NA	Brake pad rear NA/ front V05
16	AFS.03308	Pastiglia freno ant. V05-09 azzurra	Front brake pad blue V05-V09

DD PINZA POSTERIORE V05 - REAR BRAKE CALIPER V05 - supersport

KZ PINZA POSTERIORE V05 - REAR BRAKE CALIPER V05 - supersport

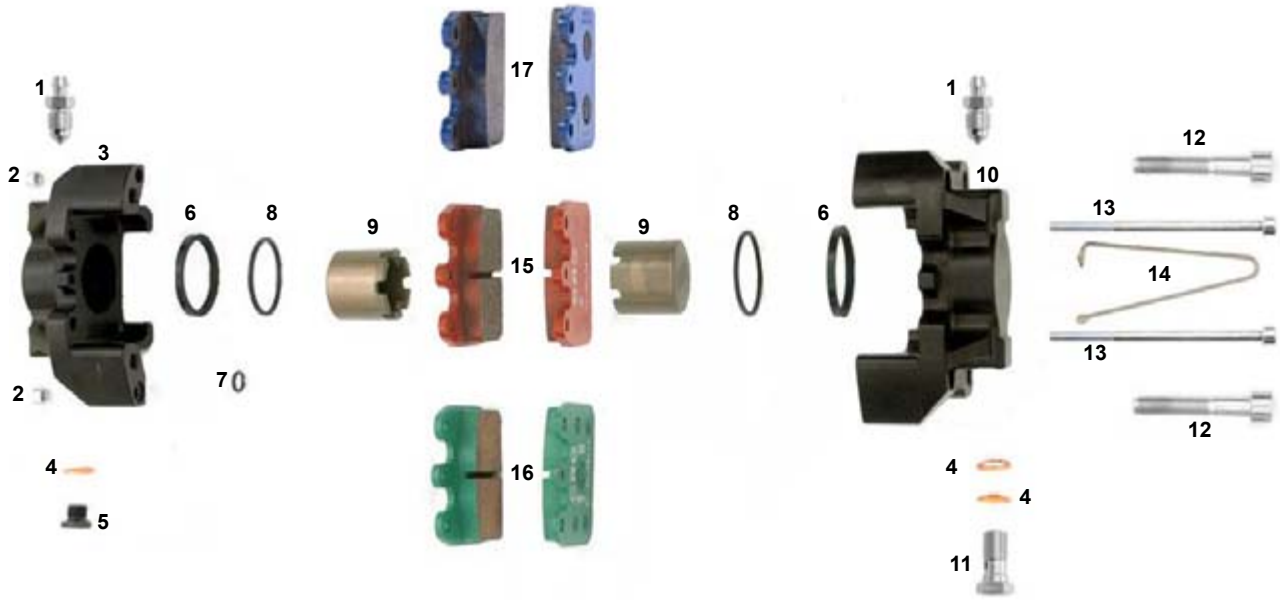

A

B

C

ES	COD.	DESCRIZIONE	ITEMS
A	FM0.01727	Pinza freno posteriore V05 ghisa comp.	Rear brake caliper V05 iron comp.
B	FM0.01678	Pinza freno post. V05 duralcan comp.	Rear brake caliper V05 duralcan comp.
C	CRG.01681	Kit revisione pinza posteriore V05	Revision kit rear brake caliper V05
1	SZ0.00184	Spurgo M10 UP/V04/V05	Bleeder M10 UP/V04/V05
2	AFN.00360	Dado M 5 autoblock basso	Nut M 5 low self-locking
3	SDN.1678D	Semi pinza posteriore V05 destra nera	Half rear brake caliper V05 rh black
4	AFN.00186	Rondella 10,5-14x2 rame	Copper washer 10,5-14x2
5	SBN.00369	Tappo M10 UP/V04/V05	Caliper cap M10 UP/V04/V05
6	AFS.01051	Gommino pinza posteriore V05/V08	V05/V08 rear brake caliper seal
7	AFN.00182	Or pinza UP/V04/V05	O-ring caliper UP/V04/V05
8	AFS.01681	Gommino parapolvere V05/V08	V05/V08 dust guard seal
9	SD1.01680	Pistoncino pinza V05 posteriore	V05 rear brake caliper piston
10	SDN.1678S	Semi pinza posteriore V05 sinistra nera	Half rear brake caliper V05 lf black
11	SZ0.00185	Raccordo M10 UP/V04/V05	Fitting M10 UP/V04/V05
12	AFN.00159	Vite M 8x 45 cilindrica	M 8x 45 socket head screw
13	AFN.01679	Vite M 5x 80 cilindrica	M 5x 80 socket head screw
14	AFS.01682	Spina sicurezza pinza posteriore V05/V08	V05/V08 rear safety pin
15	AFS.01745	Pastiglia freno posteriore V05 rossa	Rear brake pad V05 iron red
16	AFS.01624	Pastiglia freno posteriore V05 verde	Rear brake pad V05 green
17	AFS.03307	Pastiglia freno post. V05-09 azzurra	Rear brake pad V05-09 blue

DD PINZA ANTERIORE V10 - FRONT BRAKE CALIPER V10

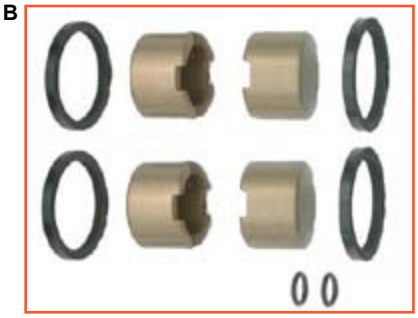

ES	COD.	DESCRIZIONE	ITEMS
A	FM0.03258	Pinza anteriore V10 D24 completa	Front brake caliper V10 assy
B	CRG.00311	Kit revisione pinza anteriore dx-sx	Revision kit front caliper rh-lf
1	FM0.00308	Raccordo combinato completo	Bleeder fitting complete
2	SZ0.00309	Spurgo M 6 UP/V04/V05	Bleeder M 6 UP/V04/V05
3	SZ0.00308	Raccordo combinato M10	Bleeder fitting
4	AFN.00186	Rondella 10,5-14x2 rame	Copper washer 10,5-14x2
5	SAN.03258	Semi pinza ant. V10 destra/sinistra	Half front caliper V10 24 rh/lf
6	SZ0.00184	Spurgo M10 UP/V04/V05	Bleeder M10 UP/V04/V05
7	AFS.03166	Gommino pinza anteriore V10 24	Piston seal V10 24 front
8	SD1.03260	Pistoncino pinza V10 24	Brake piston V10 24 front
9	AFN.03814	Or pinza UP/V04/V05	O-ring caliper UP/V04/V05
10	SAN.03259	Semi pinza ant. V10 orecchiette dx/sx	Half brake caliper V10 24 rear rh/lf
11	AFS.00187	Spina sicurezza anteriore UP/V04/V05	Safety pin UP/V04/V05
12	AFN.00132	Vite M 8x 40 cilindrica	M 8x 40 socket head screw
13	AFS.00181	Spina blocca pastiglia pinza anteriore	Brake pad block pin V06
14	AFS.00306	Pastiglia freno anteriore V04/V06	Front brake pad V04/V06 std
15	AFS.01048	Pastiglia freno anteriore V04/V06 sint.	Front brake pad sintered V04/V06
16	AFS.03325	Pastiglia freno anteriore V10-mini azzurra	Front brake pad blue V10-mini

KZ PINZA ANTERIORE V05 - BRAKE CALIPER V05 - supersport

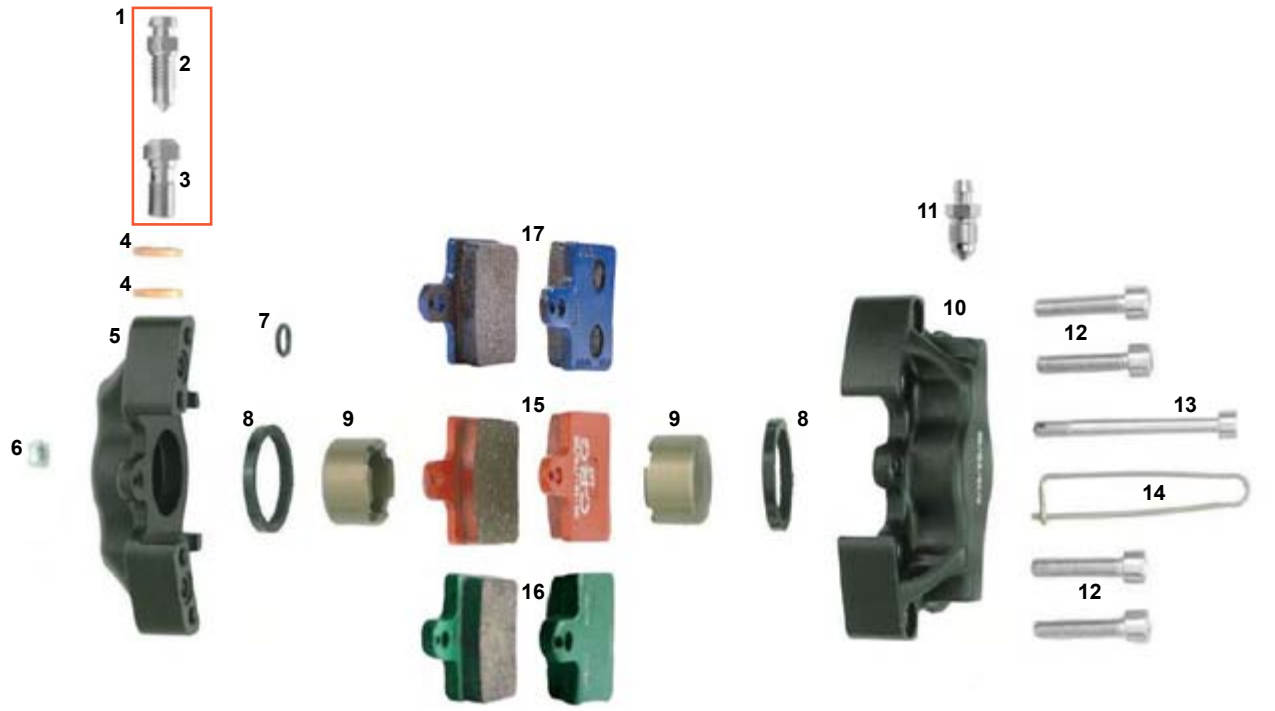

A

B

C

ES	COD.	DESCRIZIONE	ITEMS
A	FM0.0363S	Pinza anteriore UP/V05 ghisa sx comp.	Front brake caliper UP/V05 iron left
A	FM0.0363D	Pinza anteriore UP/V05 ghisa dx comp.	Front brake caliper UP/V05 iron right
B	FM0.1407S	Pinza ant. UP/V05 duralcan sx comp	Front brake caliper UP/V05 duralcan left
B	FM0.1407D	Pinza ant. UP/V05 duralcan dx comp.	Front brake caliper UP/V05 duralcan right
C	CRG.00364	Kit revisione pinza anteriore UP/V05	Revision kit front brake caliper V05
1	FM0.00308	Raccordo combinato completo	Bleeder fitting complete
2	SZ0.00309	Spurgo M 6 UP/V04/V05	Bleeder M 6 UP/V04/V05
3	SZ0.00308	Raccordo combinato M10	Bleeder fitting
4	AFN.00186	Rondella 10,5-14x2 rame	Copper washer 10,5-14x2
5	SDN.0365D	Semi pinza ant. V05/UP con orecc. dx	Half caliper UP/V05 front right
5	SDN.0364D	Semi pinza ant. V05/UP destra	Half caliper UP/V05 front right black
6	AFN.00360	Dado M 5 autoblock basso	Nut M 5 low self-locking
7	AFN.03814	Or pinza UP/V04/V05	O-ring caliper UP/V04/V05
8	AFS.00179	Gommino pinza anteriore UP/V05	Piston seal front UP/V05
9	SD1.00370	Pistoncino pinza V05/V08 anteriore	V05/V08 front brake caliper piston
10	SDN.0365S	Semi pinza ant. V05/UP con orecc. sx	Half caliper UP/V05 front left
11	SDN.0364S	Semi pinza ant. V05/UP sinistra	Half caliper UP/V05 front left black
11	SZ0.00184	Spurgo M10 UP/V04/V05	Bleeder M10 UP/V04/V05
12	AFN.00368	Vite M 6x40 cilindrica	M 6x40 socket head screw
13	AFN.00367	Vite M 5x55 cilindrica	M 5x55 socket head screw
14	AFS.00187	Spina sicurezza anteriore V05/UP/V04	Safety pin UP/V04/V05 front
15	AFS.02997	Pastiglia freno ant. V05 g/post. NA	Brake pad rear NA/ front V05
16	AFS.01046	Pastiglia freno anteriore V05 verde	Front brake pad V05 green
17	AFS.03308	Pastiglia freno ant. V05-09 azzurra	Front brake pad blue V05-V09

KZ PINZA POSTERIORE V08 - REAR BRAKE CALIPER V08

DD PINZA POSTERIORE V08 - REAR BRAKE CALIPER V08

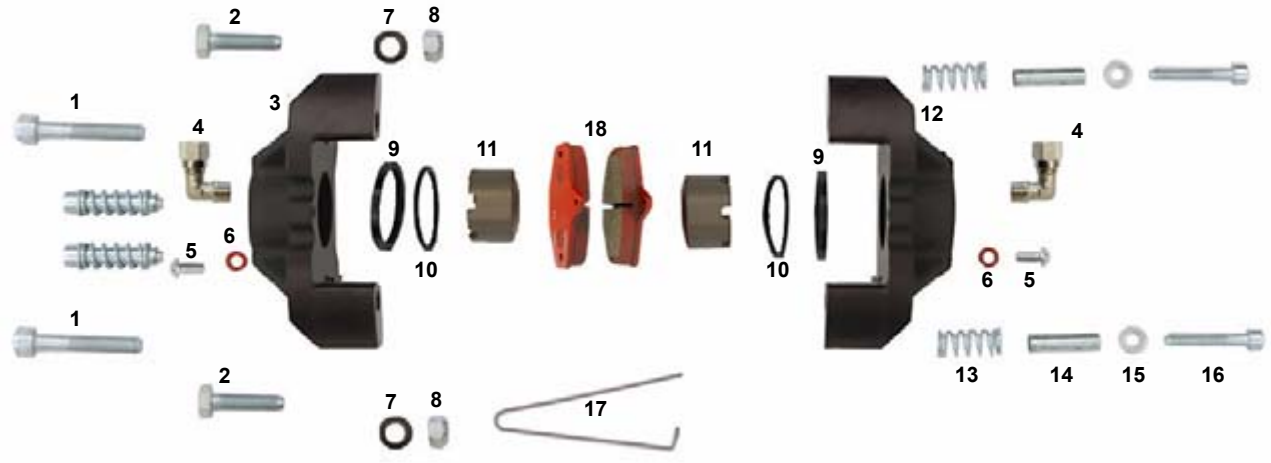

A

B

ES	COD.	DESCRIZIONE	ITEMS
A	FM0.02004	Pinza freno posteriore V08 completa	Rear brake caliper V08 complete
B	CRG.02004	Kit revisione pinza posteriore V08	Kit V08 rear brake caliper rev.
1	AFN.00159	Vite M 8x 45 cilindrica	M 8x 45 socket head screw
2	AFN.00107	Vite M 8x 25 esagonale	M 8x 25 hexagonal head screw
3	SAN.2004S	Semi pinza post.V08 con orecchie sx	Half rear caliper V08 left with fittings
4	AFN.00409	Raccordo L pinza freno	Brake caliper fitting L
5	AFN.00359	Vite M 5x12 bombata	M 5x12 convex head screw
6	AFN.00402	Rondella 5-10x1,5 rame	Copper washer 5-10x1,5
7	AFN.00047	Rondella 8 ondulata	Undulated washer 8
8	AFN.00286	Dado M 8 metalblock	Nut M 8 metalblock
9	AFS.01051	Gommino pinza posteriore V05/V08	V05/V08 rear brake caliper seal
10	AFS.01681	Gommino parapolvere V05/V08	V05/V08 dust guard seal
11	SD1.02006	Pistoncino pinza V08 posteriore	V08 rear brake caliper piston
12	SAN.2004D	Semi pinza post. V08 con orecchie dx	Half rear caliper V08 no fittings
13	SBN.02014	Molla pastiglia posteriore V08	Brake pad spring V08
14	SBN.00413	Distanziale pastiglia posteriore V08/V99	Rear brake pad spacer V08/V99
15	AFN.00105	Rondella 6,5-12x1,5	Washer 6,5-12x1,5
16	AFN.00137	Vite M 6x 35 cilindrica	M 6x 35 socket head screw
17	AFS.01682	Spina sicurezza pinza post. V05/V08	V05/V08 rear safety pin
18	AFS.02000	Pastiglia freno posteriore V08	V08 rear brake pad
19	SBN.01931	Spessore pastiglia posteriore V08	Brake pad spacer V08 rear

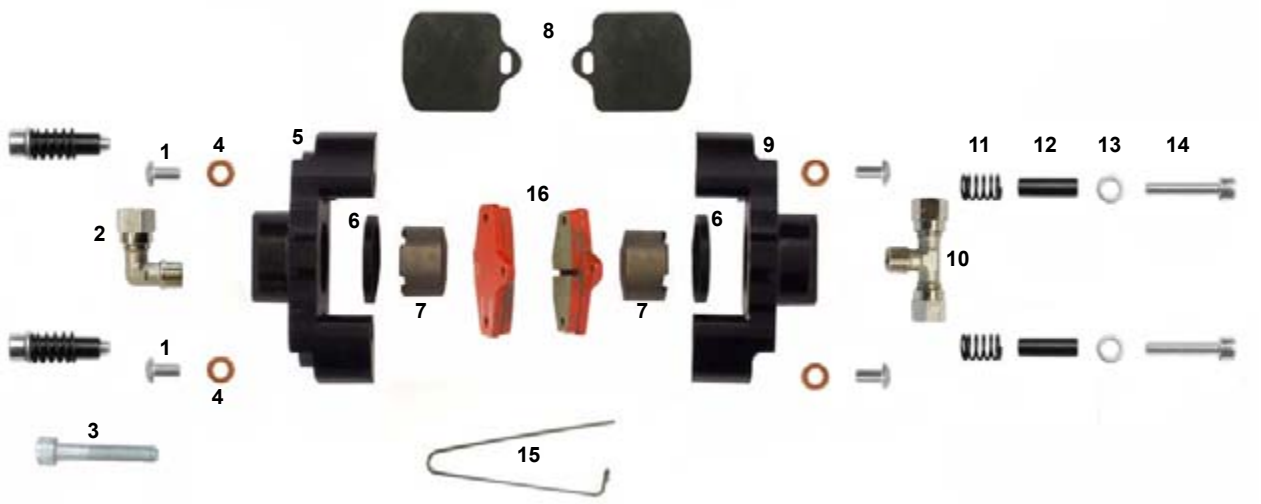

A

B

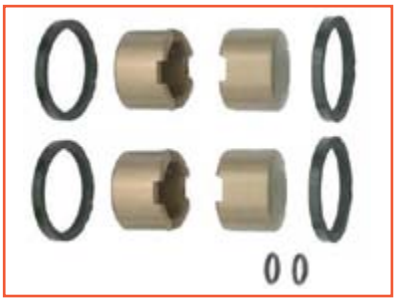

ES	COD.	DESCRIZIONE	ITEMS
A	FM0.2005D	Pinza anteriore V08 destra completa	Front brake caliper V08 right complete
A	FM0.2005S	Pinza anteriore V08 sinistra completa	Front brake caliper V08 left complete
B	CRG.00311	Kit revisione pinza anteriore dx-sx	Revision kit front caliper rh-lf
1	AFN.02058	Vite M 5x 10 bombata	M 5x 10 convex head screw
2	AFN.00409	Raccordo L pinza freno	Brake caliper fitting L
3	AFN.00159	Vite M 8x 45 cilindrica	M 8x 45 socket head screw
4	AFN.00402	Rondella 5-10x1,5 rame	Copper washer 5-10x1,5
5	SAN.2005S	Semi pinza ant. V08 dx/sx con orecchie	Half f.caliper V08 right/left with fittings
6	AFS.00179	Gommino pinza anteriore UP/V04/V05	Piston seal UP/V04/V05 front
7	SD1.00370	Pistoncino pinza V05/V08 anteriore	V05/V08 front brake caliper piston
8	SBN.01973	Spessore pastiglia anteriore V08	Brake pad spacer V08 front
9	SAN.2005D	Semi pinza ant. V08 dx/sx no orecchie	Half f.caliper V08 right/left no fittings
10	AFN.01367	Raccordo T pinza freno	Brake caliper fitting T
11	SBN.02003	Molla pastiglia anteriore V08 nera	Brake pad spring V08 black front
12	SBN.02015	Distanziale pastiglia freno anteriore V08	Brake pad spacer V08 front
13	AFN.00105	Rondella 6,5-12x1,5	Washer 6,5-12x1,5
14	AFN.00281	Vite M 6x30 cilindrica	M 6x30 socket head screw
15	AFS.00892	Spina sicurezza pinza anteriore V08	V08 front safety pin
16	AFS.02001	Pastiglia freno anteriore V08	Front brake pad V08

DD PINZA POSTERIORE V04 - REAR BRAKE CALIPER V04

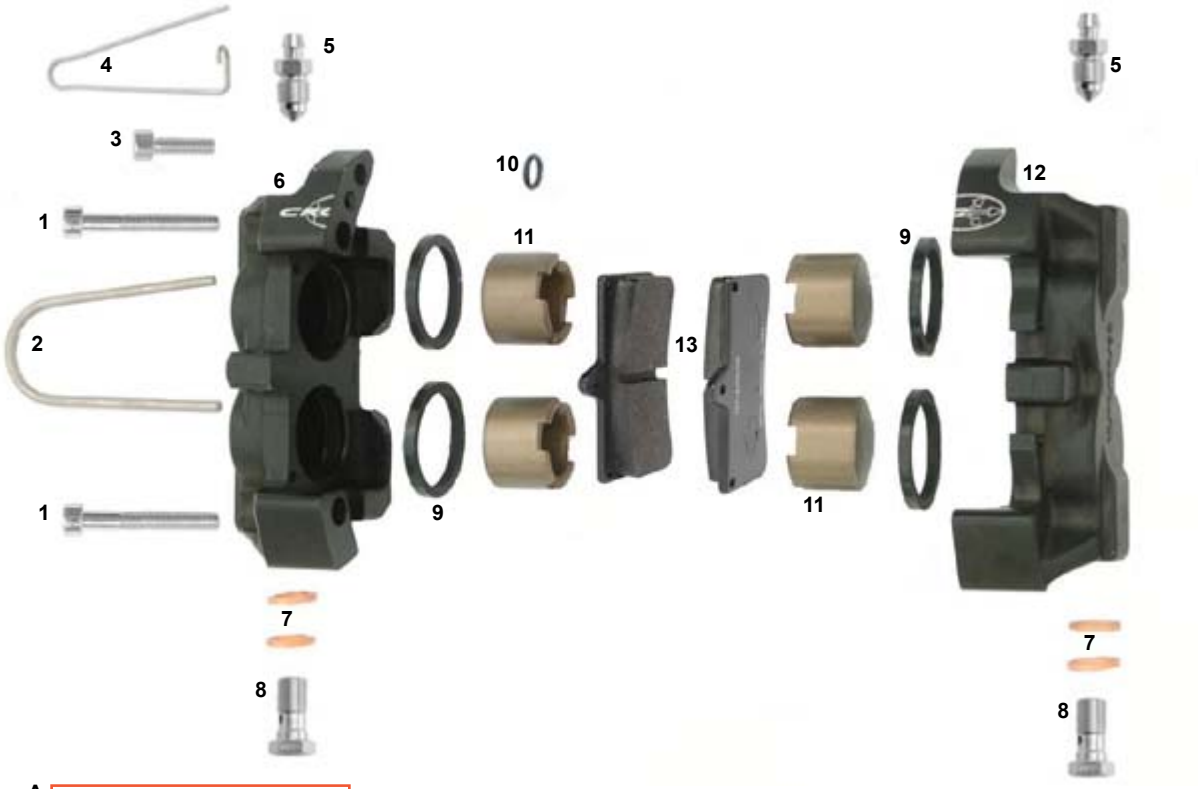

A

ES	COD.	DESCRIZIONE	DESCRIPTION
A	FM0.00178	Pinza posteriore V04 completa	Rear brake caliper V04 complete
1	AFN.00132	Vite M 8x 40 cilindrica	M 8x 40 socket head screw
2	AFS.01682	Spina sicurezza pinza posteriore V05/V08	V05/V08 rear safety pin
3	AFN.01585	Vite M 6x16 cilindrica	M 6x16 socket head screw
4	AFS.00187	Spina sicurezza anteriore UP/V04//V05	Safety pin UP/V04/V05 front
5	SZ0.00184	Spurgo M10 UP/V04/V05	Bleeder M10 UP/V04/V05
6	SDN.0178D	Semi pinza V04 posteriore dx nera	Half rear caliper V04 right black
7	AFN.00186	Rondella 10,5-14x2 rame	Copper washer 10,5-14x2
8	SZ0.00185	Raccordo M10 UP/V04/V05	Fitting M10 UP/V04/V05
9	AFS.00179	Gommino pinza anteriore V05/UP/V04	Piston seal UP/V04/V05 front
10	AFN.00182	Or pinza UP/V04/V05	Caliper o-ring UP/V04/V05
11	SD1.00370	Pistoncino pinza V05/V08 anteriore	V05/V08 front brake caliper piston
12	SDN.0178S	Semi pinza V04 posteriore sinistra nera	Half rear caliper V04 left black
13	AFS.00180	Pastiglia freno posteriore V04	Rear brake pad V04

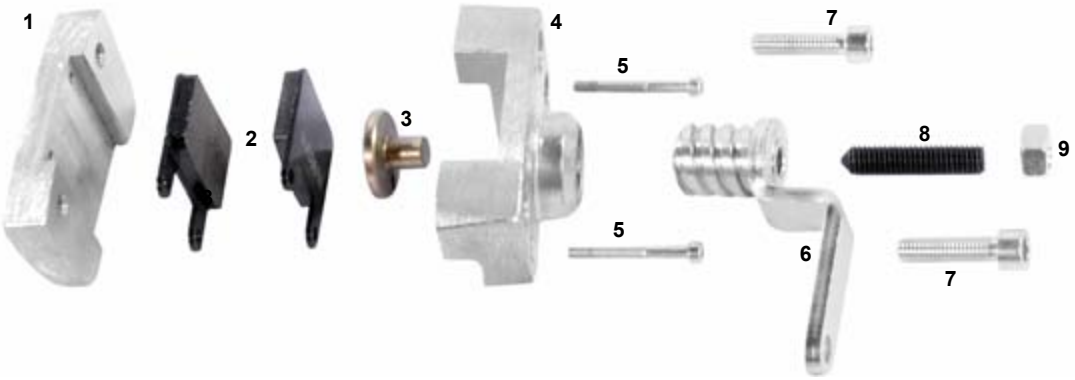

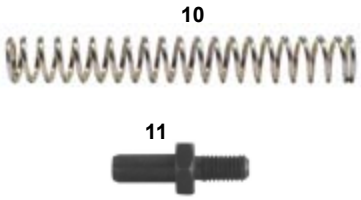

ES	COD.	DESCRIZIONE	DESCRIPTION
A	FM0.00458	Pinza freno Puffo completa	Rear brake caliper Puffo complete
1	SL1.0538D	Semi pinza Puffo destra	Half caliper Puffo right
2	AFS.00438	Pastiglia freno Puffo	Brake pad Puffo
3	SL1.00454	Pistoncino pinza Puffo	Piston Puffo caliper
4	SL1.0538S	Semi pinza Puffo sinistra	Half caliper Puffo left
5	AFN.00494	Vite M 3x30 cilindrica	M 3x30 socket head screw
6	SBN.00467	Svitone pinza Puffo	Puffo brake caliper unscrew
7	AFN.00478	Vite M 6x25 cilindrica	M 6x25 socket head screw
8	AFN.00498	Grano M8x 35 pinza Puffo	Grub screw M8x 35 Puffo brake caliper
9	AFN.0049D	Dado M 8	Nut M 8
10	FZ0.00517	Molla pinza freno Puffo	Puffo brake spring
11	FBN.01086	Perno pinza Puffo	Caliper pivot Puffo

M POMPA FRENI NEW AGE ORO - NEW AGE MASTER CYLINDER GOLD

OKJ POMPA FRENI V09 ORO - V09 MASTER CYLINDER GOLD

DD POMPA FRENI V10 ORO - V10 MASTER CYLINDER GOLD

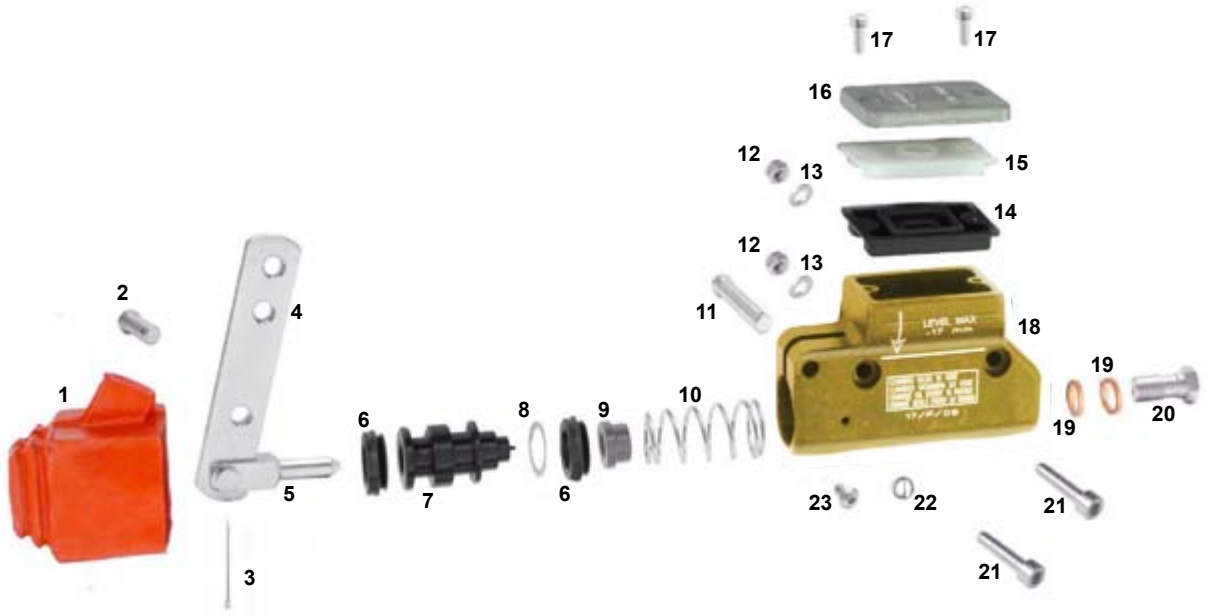

A

B

C

ES	COD.	DESCRIZIONE	ITEMS
A	FMG.00192	Pompa freni V09/10 completa oro	Rear master cylinder V09/10 gold comp
B	FMG.00329	Doppia pompa UP/V04 + rip. KZ oro	Double master cylinder V04 with equal. gold
C	CRG.00192	Kit revisione pompa freno V09/10 comp.	Revision kit master cylinder V09/10
1	AFS.00199	Copripolvere pompa freni	Dust cover for brake pump
2	SBN.00200	Spina pompa freni 16mm nera	Master cylinder pin 16mm black
3	AFN.00201	Copiglia	Master cylinder split pin
4	SBN.00197	Leva pompa freni post.	Master cylinder lever
5	AFS.00196	Puntale pompa freni	Master cylinder plunger
6	AFS.00194	Gommino pompa V09/10	Master cylinder rubber V09/10
7	SAN.00210	Pistoncino pompa V09/10	Master cylinder piston V09/10
8	AFN.00195	Distanziale pompa freni 14-20x0,5	Master cylinder spacer 14-20x0,5
9	SL1.00208	Tappo molla pompa V09/10	Master cylinder spring cap V09/10
10	SZ0.00193	Molla pompa freni V09/10	Master cylinder spring V09/10
11	SBN.00202	Spina pompa freni 35,5mm	Master cylinder pin 35,5mm
12	AFN.00106	Dado M 6 autoblock basso	Nut M 6 low self-locking
13	AFN.00105	Rondella 6,5-12x1,5	Washer 6,5-12x1,5
14	AFS.00205	Membrana pompa V09/10	V09/10 master cylinder gasket
15	AFS.00204	Tappo membrana pompa V09/10	Diaphram pump cap
16	SAN.00212	Coperchio pompa freno V09/10 nero	Black cover up V09/10 master cylinder
17	AFN.02148	Vite M 4x10 cilindrica	M 4x10 socket head screw
18	SAG.00192	Corpo pompa freno V09/10	Master cylinder V09/10 body
19	AFN.00186	Rondella 10,5-14x2 rame	Copper washer 10,5-14x2
20	SZ0.00185	Raccordo M10 V09/10	Fitting M10 V09/10
21	AFN.00368	Vite M 6x 40 cilindrica	M 6x 40 socket head screw
22	AFS.00981	Spina elastica D8	Elastic pin D8
23	AFN.02262	Vite M 4x6 bombata	M 4x6 convex head screw

OKJ POMPA FRENI V09 - V09 MASTER CYLINDER

M POMPA FRENI NEW AGE - NEW AGE MASTER CYLINDER

KZ POMPA FRENI V05- V05 MASTER CYLINDER - supersport

DD POMPA FRENI V05- V05 MASTER CYLINDER - supersport

DD POMPA FRENI V10 - MASTER CYLINDER V10

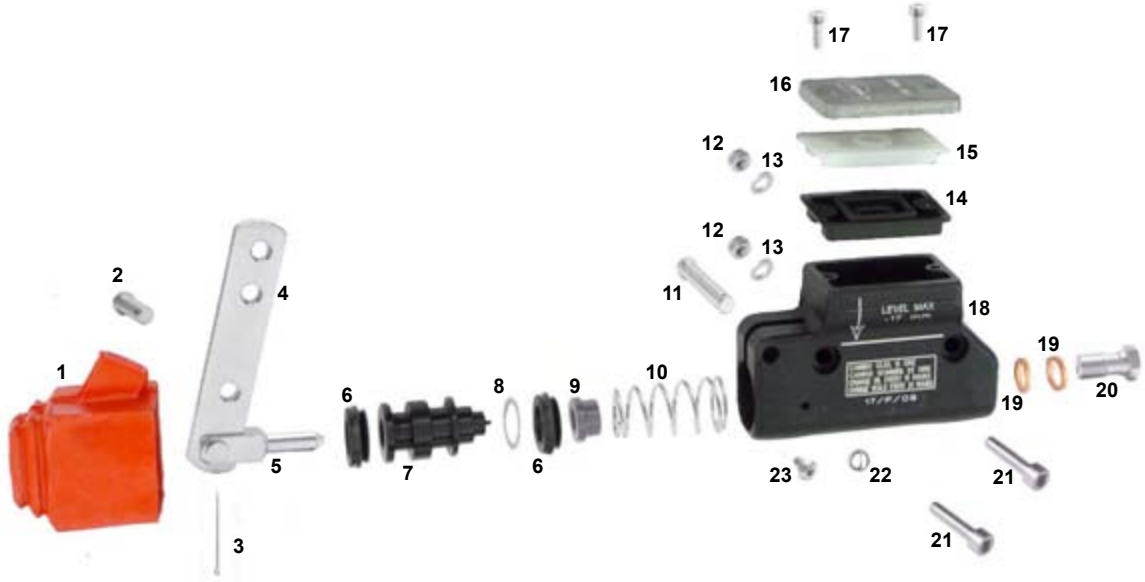

A

B

C

ES	COD.	DESCRIZIONE	ITEMS
A	FM0.00192	Pompa freni V09/10 completa	Rear master cylinder V09/10 comp
B	FM0.00329	Doppia pompa UP/V04/V05 con rip.KZ	KZ doublemaster cyl.V05 with equilizer
C	CRG.00192	Kit revisione pompa freno UP/V05 comp.	Revision kit master cylinder complete
1	AFS.00199	Copripolvere pompa freni	Dust cover for brake pump
2	SBN.00200	Spina pompa freni 16mm nera	Master cylinder pin 16mm black
3	AFN.00201	Copiglia	Master cylinder split pin
4	SBN.00197	Leva pompa freni post.	Master cylinder lever
5	AFS.00196	Puntale pompa freni	Master cylinder plunger
6	AFS.00194	Gommino pompa UP/V04/V05	Master cylinder rubber UP/V04/V05
7	SAN.00210	Pistoncino pompa UP/V04/V05	Master cylinder piston UP/V04/V05
8	AFN.00195	Distanziale pompa freni 14-20x0,5	Master cylinder spacer 14-20x0,5
9	SL1.00208	Tappo molla pompa UP/V04/V05	Master cylinder spring cap UP/V04/V05
10	SZ0.00193	Molla pompa freni UP/V04/V05	Master cylinder spring UP/V04/V05
11	SBN.00202	Spina pompa freni 35,5mm	Master cylinder pin 35,5mm
12	AFN.00106	Dado M 6 autoblock basso	Nut M 6 low self-locking
13	AFN.00105	Rondella 6,5-12x1,5	Washer 6,5-12x1,5
14	AFS.00205	Membrana pompa UP/V04	UP/V04 master cylinder gasket
15	AFS.00204	Tappo membrana pompa UP/V04	Diaphram pump cap
16	SAN.00212	Coperchio pompa freno UP/V04 nero	Black cover up master cylinder
17	AFN.02148	Vite M 4x 10 cilindrica	M 4x 10 socket head screw
18	SAN.00192	Corpo pompa freno UP/V04/V05	Master cylinder UP/V04/V05 body
19	AFN.00186	Rondella 10,5-14x2 rame	Copper washer 10,5-14x2
20	SZ0.00185	Raccordo M10 UP/V04/V05	Fitting M10 UP/V04/V05
21	AFN.00368	Vite M 6x 40 cilindrica	M 6x 40 socket head screw
22	AFS.00981	Spina elastica D8	Elastic pin D8
23	AFN.02262	Vite M 4x6 bombata	M 4x6 convex head screw

DD POMPA FRENI V08 - MASTER CYLINDER V08

KZ POMPA FRENI V08 - MASTER CYLINDER V08

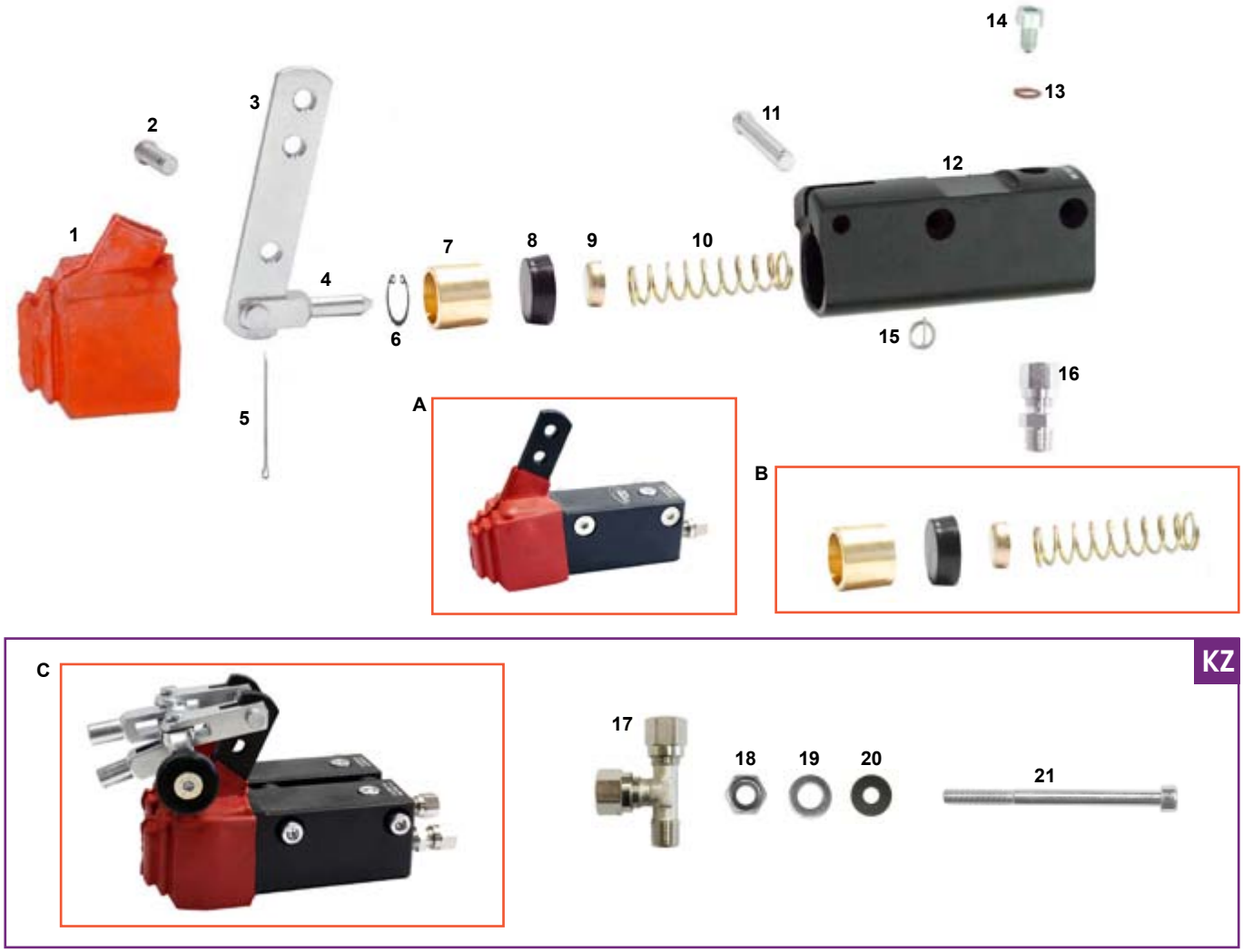

ES	COD.	DESCRIZIONE	ITEMS
A	FM0.00421	Pompa freni V08/V99 completo	Master cylinder V08/V99 complete
B	CRG.00421	Kit revisione pompa freni V08/V99	Substiture kit master cylinder V08/V099
C	FM0.00485	Doppia pompa V08/V99 con ripartitore	2 master cylinder V08/V99 with equa.
1	AFS.00199	Copripolvere pompa freni	Dust cover for brake pump
2	SBN.00200	Spina pompa freni 16mm	Master cylinder pin 16mm
3	SBN.00197	Leva pompa freni posteriore	Master cylinder lever rear
4	AFS.00196	Puntale pompa freni	Master cylinder plunger
5	AFN.00201	Copiglia	Master cylinder split pin
6	AFN.00154	Seeger D22 piantone/pompa acqua	Seeger D 22 steering column/water pump
7	SAN.00426	Pistoncino pompa freno V08/V99	Master cylinder piston V99/V08
8	AFS.00406	Gommino pinza/pompa D22 V99	Brake rubber D22 V99
9	AFS.00423	Tappo molla pompa V99/V08	Brake pump cap V08/V99
10	SZ0.00422	Molla pompa freni V99/V08	Master cylinder spring V99/V08
11	SBN.00202	Spina pompa freni 35,5mm	Master cylinder pin 35,5mm
12	SAN.00421	Corpo pompa freno V08/V99	Master cylinder body V08/V99
13	AFN.02062	Rondella 6-10x1 fibra	Fiber washer 6-10x1
14	AFN.01585	Vite M 6x16 cilindrica	M 6x16 socket head screw
15	AFS.00981	Spina elastica D8	Elastic pin D8
16	AFN.00425	Raccordo diritto completo	Straight pipe fitting complete
17	AFN.00486	Raccordo T pompa freni	Master cylinder fitting T
18	AFN.00264	Dado M 6 autoblock alto	Nut M 6 high self-locking
19	AFN.00105	Rondella 6,5-12x1,5	Washer 6,5-12x1,5
20	SBN.00220	Spessore 6,5-15x3 pompa	Master cylinder spacer 6,5-15x3
21	AFN.00786	Vite M 6x 80 cilindrica	M 6x 80 socket head screw

DD POMPA FRENI V10 - V10 ORO - MASTER CYLINDER V10 - V10 GOLD

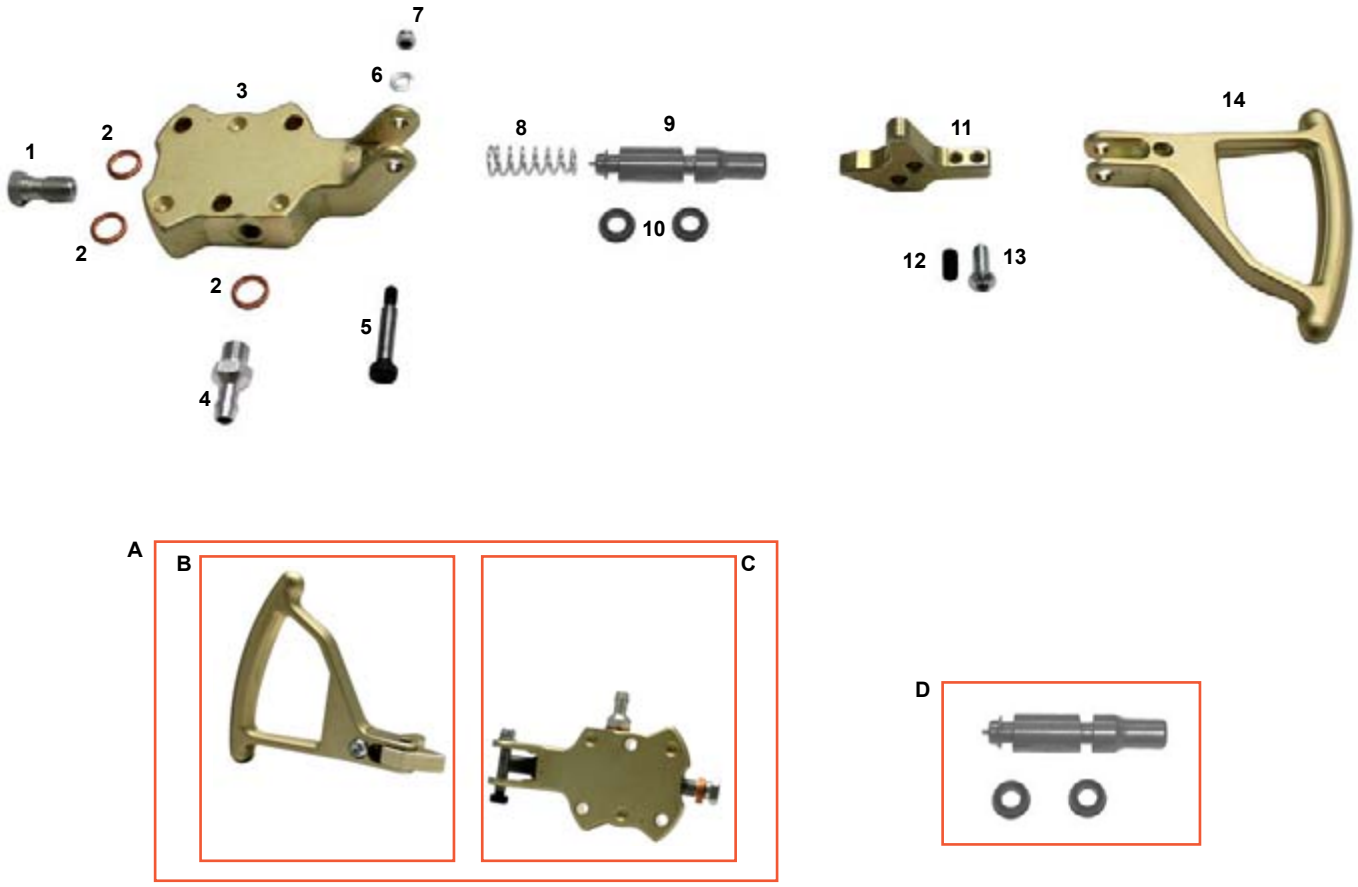

ES	COD.	DESCRIZIONE	ITEMS
A	FK0.01909	Pompa freni anteriore V106 oro con leva	Master cylinder V10 with lever gold
B	FK0.01907	Leva pompa freno anteriore completa	Front master cylinder lever complete
C	FM0.01909	Pompa freni V10 no leva oro	Front master cylinder V10 no lever gold
D	FM0.01911	Pistoncino pompa freno FA completa	Front master cyl. piston complete
1	SZ0.00185	Raccordo M10 V09/10	Fitting M10 V09/10
2	AFN.00186	Rondella 10,5-14x2 rame	Copper washer 10,5-14x2
3	SAG.01909	Corpo pompa freno oro anteriore	Fron master cylinder body gold
4	SBN.01919	Raccordo serbatoio pompa FA	Fron master cylinder tank fitting
5	AFN.01916	Vite M 5x25 gambo rettificato M6	M 5x25 rectifier stem M6 screw
6	AFN.02264	Rondella 5,3-9x1,5	Washer 5,3-9x1,5
7	AFN.00360	Dado M 5 autoblock basso	Nut M 5 low self-locking
8	SZ0.01896	Molla pompa freni FA	Master cylinder FBS spring
9	SDN.01911	Pistoncino pompa freno FA	Master cylinder FBS piston
10	AFS.01912	Gommino pompa freno FA	Front master cylinder rubber
11	SAG.01910	Puntale pompa freno anteriore DD oro	Master cylinder plunger front DD gold
12	AFN.00357	Grano M 6x10	Grub screw M 6x10
13	AFN.00502	Vite M 6x16 bombata	M 6x16 convex head screw
14	SAN.01907	Leva pompa freno anteriore oro DD	Aluminium master cylinder lever DD gold

ES	COD.	DESCRIZIONE	ITEMS
1	AFN.00425	Raccordo dritto completo	Straight pipe-fitting complete
2	AFN.00409	Raccordo L pinza freno	Brake caliper fitting L
3	AFN.00486	Raccordo T pompa freni	Master cylinder fitting T
4	AFN.01367	Raccordo T pinza freno	Brake caliper fitting T
5	AFN.00431	Raccordo T tubo freno	Brake tube fitting T
6	AFN.01363	Dado raccordo	Fitting nut
7	AFN.01042	Ogiva esterna tubo freno	Brake tube external ogive
8	AFN.01041	Ogiva interna tubo freno	Brake tube internal ogive

KZ RIPARTITORE FRENATA V05 - BRAKE EQUALIZER V05

KZ RIPARTITORE FRENATA V08 - BRAKE EQUALIZER V08

KZ RIPARTITORE FRENATA V09 - BRAKE EQUALIZER V09

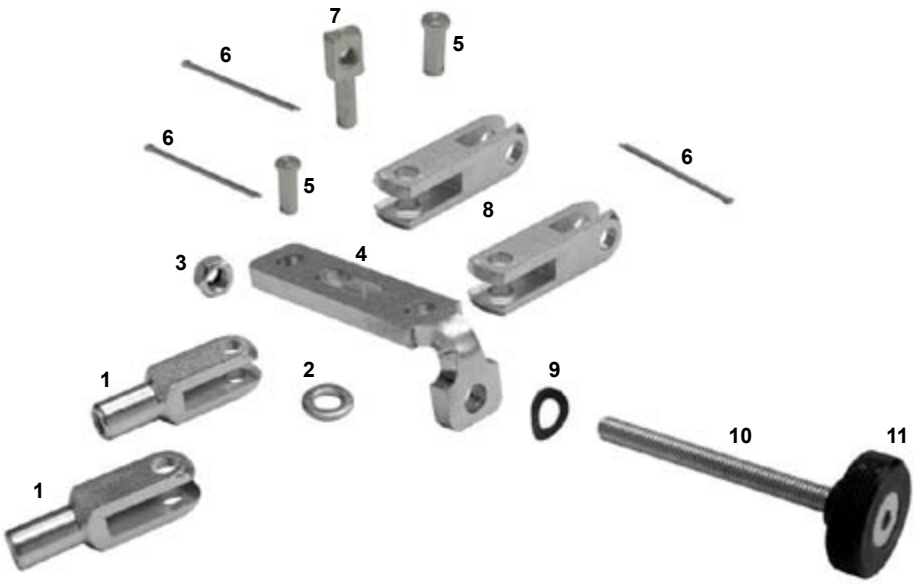

C

ES	COD.	DESCRIZIONE	ITEMS
C	FM0.00330	Ripartitore frenata KZ	Brake equalizer KZ complete
1	AFS.00216	Forchetta semplice standard	Simple fork standard
2	AFN.00105	Rondella 6,5-12x1,5	Washer 6,5-12x1,5
3	AFN.00106	Dado M 6 autoblock basso	Nut M 6 low self-locking
4	SBN.00334	Piastrina ripartitore KZ	Master cylinder KZ equal.
5	SBN.00214	Spina ripartitore 17,5mm	Divider pin 17,5mm
6	AFN.00201	Copiglia	Master cylinder split pin
7	SBN.00335	Perno registro ripartitore KZ	Master cylinder div. KZ reg. pivot
8	AFS.00215	Forchetta doppia	Double fork
9	AFN.00331	Rondella 6 ondulata	Undulated washer 6
10	AFN.02322	Vite M 6x70 svasata	M 6x70 countersunk head screw
11	SAN.00333	Pomolo registro ripartitore nero	Divider register pommel black

TIRANTI FRENO - BRAKE RODS

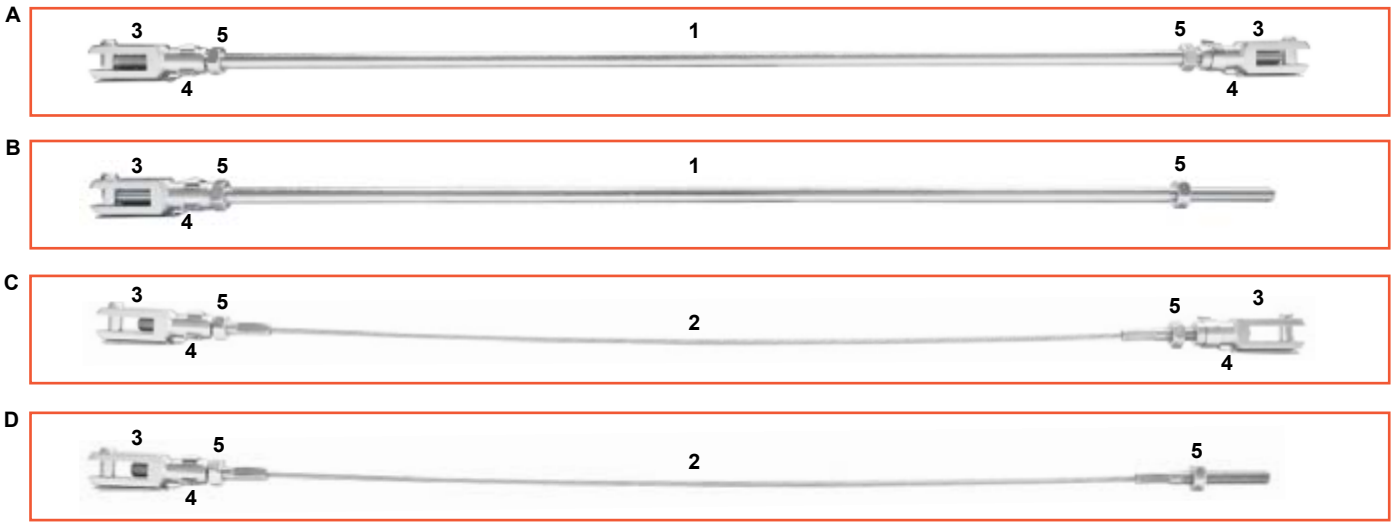

ES	COD.	DESCRIZIONE	ITEMS
A	FK0.00918	Asta freno cm.45 DD completa	Brake rod cm.45 DD complete
B	FK0.00223	Asta freno cm.42 KZ completa	Brake rod cm.42 KZ complete
C	FK0.00809	Cavo freno cm.44 DD completo	Safety cable cm.44 DD complete
D	FK0.00227	Cavo freno cm.41,5 KZ completo	Safety cable cm.41,5 KZ complete
1	SBN.01566	Asta freno cm.24	Brake rod cm.24
1	SBN.00565	Asta freno cm.27	Brake rod cm.27
1	SBN.00566	Asta freno cm.28	Brake rod cm.28
1	SBN.01518	Asta freno cm.30	Brake rod cm.30
1	SBN.00933	Asta freno cm.32	Brake rod cm.32
1	SBN.00704	Asta freno cm.33	Brake rod cm.33
1	SBN.00744	Asta freno cm.38	Brake rod cm.38
1	SBN.00931	Asta freno cm.40	Brake rod cm.40
1	SBN.00223	Asta freno cm.42	Brake rod cm.42
1	SBN.00888	Asta freno cm.43	Brake rod cm.43
1	SBN.00918	Asta freno cm.45	Brake rod cm.45
1	SBN.00932	Asta freno cm.46	Brake rod cm.46
1	SBN.00801	Asta freno cm.48	Brake rod cm.48
1	SBN.00802	Asta freno cm.49	Brake rod cm.49
1	SBN.01358	Asta freno cm.52	Brake rod cm.52
1	SBN.00804	Asta freno cm.55	Brake rod cm.55
2	AFS.00805	Cavo sicurezza cm.25	Safety cable cm.25
2	AFS.00807	Cavo sicurezza cm.29	Safety cable cm.29
2	AFS.00808	Cavo sicurezza cm.33	Safety cable cm.33
2	AFS.00745	Cavo sicurezza cm.39	Safety cable cm.39
2	AFS.00227	Cavo sicurezza cm.41,5	Safety cable cm.41,5
2	AFS.00809	Cavo sicurezza cm.44	Safety cable cm.44
2	AFS.00810	Cavo sicurezza cm.48,5	Safety cable cm.48,5
2	AFS.00811	Cavo sicurezza cm.52	Safety cable cm.52
2	AFS.00812	Cavo sicurezza cm.54	Safety cable cm.54
3	AFS.00216	Forchetta semplice standard	Simple fork standard
3	AFS.01190	Forchetta semplice corta	Short fork simple
4	AFS.00224	Clift std	Clift std
4	AFS.01189	Clift corta	Short clift
5	AFN.00093	Dado M 6	Nut M 6

BARRETTE STERZO - TRACK RODS

ES	COD.	DESCRIZIONE	ITEMS
1	FAN.01808	Barretta esa cm.16,5	Hexagonal track rod cm.16,5
1	FAN.00718	Barretta esa cm.19	Hexagonal track rod cm.19
1	FAN.00717	Barretta esa cm.20	Hexagonal track rod cm.20
1	FAN.01538	Barretta esa cm.20,5	Hexagonal track rod cm.20,5
1	FAN.01441	Barretta esa cm.21	Hexagonal track rod cm.21
1	FAN.01539	Barretta esa cm.21,5	Hexagonal track rod cm.21,5
1	FAN.00995	Barretta esa cm.22	Hexagonal track rod cm.22
1	FAN.00546	Barretta esa cm.23	Hexagonal track rod cm.23
1	FAN.00813	Barretta esa cm.24	Hexagonal track rod cm.24
1	FAN.00814	Barretta esa cm.25	Hexagonal track rod cm.25
1	FAN.00822	Barretta esa cm.26	Hexagonal track rod cm.26
1	FAN.00815	Barretta esa cm.26,5	Hexagonal track rod cm.26,5
1	FAN.00612	Barretta esa cm.27	Hexagonal track rod cm.27
1	FAN.00816	Barretta esa cm.27,5	Hexagonal track rod cm.27,5
1	FAN.00045	Barretta esa cm.28	Hexagonal track rod cm.28
1	FAN.02027	Barretta esa cm.28,5	Hexagonal track rod cm.28,5
1	FAN.02028	Barretta esa cm.33	Hexagonal track rod cm.33
2	AFS.0047D	Uniball sterzo dx con dado	Ball joint rh with nut
3	AFS.0047S	Uniball sterzo sx con dado	Ball joint lf with nut
4	FBN.00252	Spessore 8,5-14x5 barretta	Spacer 8,5-14x5 track rod

FUSELLO 10.25 CASTER NEW - STUB AXLE 10.25 CASTER NEW

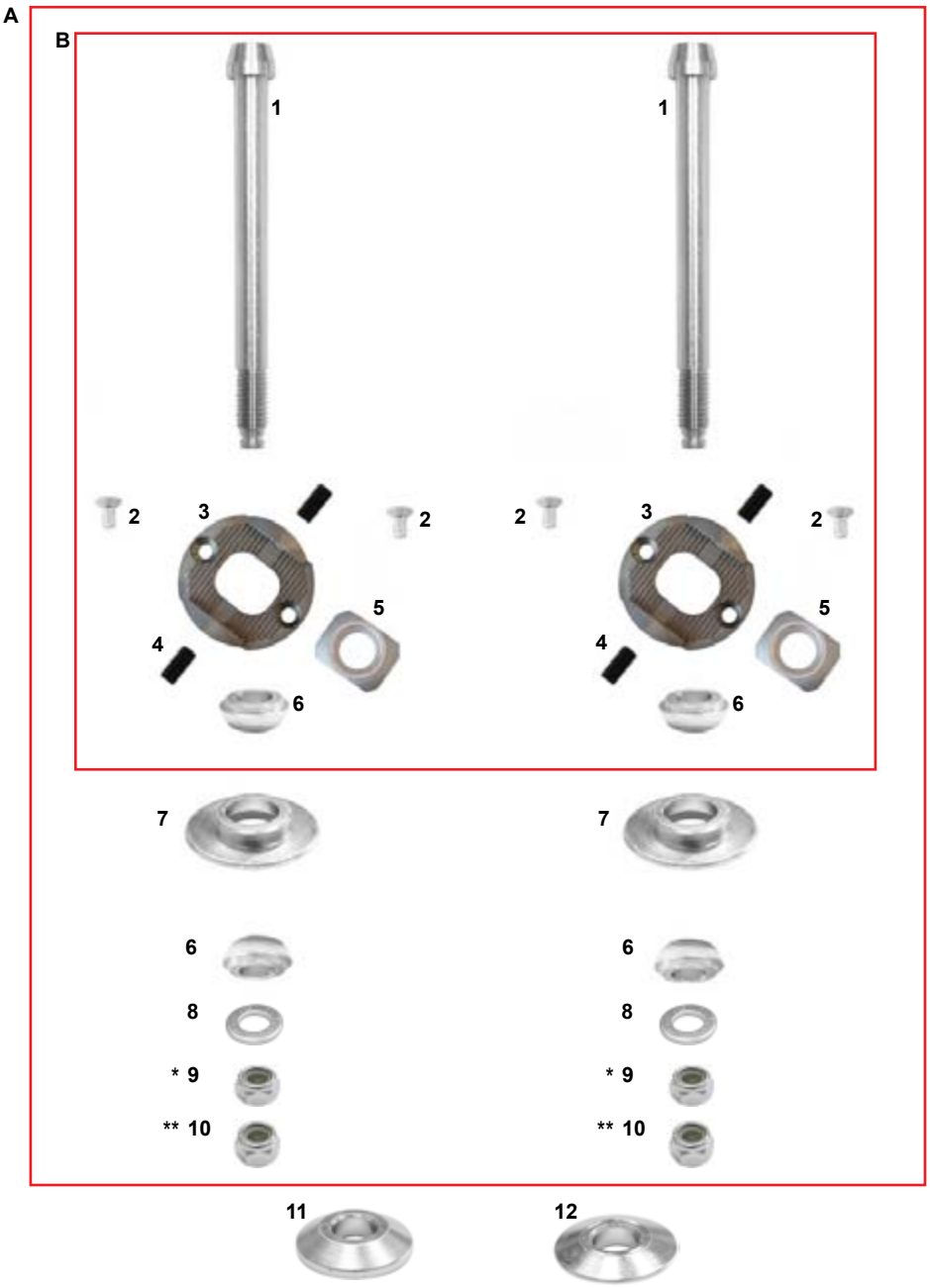

ES	COD.	DESCRIZIONE	ITEMS
A	FK0.02352	Set caster Sniper new completo KZ	Sniper caster system new complete KZ
	FK0.01608	Set caster Sniper new completo DD	Sniper caster system new complete DD
B	FK0.02353	Set caster Sniper new superiore	Sniper caster system new top
1	FBN.02401	Vite fusello 10x111	Stub axle bolt 10x111
2	AFN.02408	Vite M 4x 8 svasata	M 4x 8 countersunk head screw
3	AFS.02352	Caster porta piastrina A	Caster support A
4	AFN.02390	Grani M 5x 10 caster doppio	Grub screw M 5x 10 (set)
5	AFS.02353	Caster piastrina alta B	Caster high B
6	FZ0.02450	Boccola mezza sfera caster	Bushing half caster
7	FZ0.01602	Caster fisso sferico	Caster fixed
8	AFN.01637	Rondella 10,5-20x2	Washer 10,5-20x2
9	AFN.00657	Dado M10 autoblock basso	Nut M10 low self-locking
10	AFN.02393	Dado M10 autoblock alto	Nut M10 high self-locking
11	FZ0.01607	Spessore 10-28x6 fusello piano	Stub axle space 10-28x6 plain
12	FZ0.01719	Spessore 10-28x6 fusello conico	Stub axle space 10-28x6 conical

* Set caster sniper new completo KZ - Sniper caster system new complete KZ
** Set caster sniper new completo DD - Sniper caster system new complete DD

FUSELLO MINI CASTER NEW - STUB AXLE MINI CASTER NEW

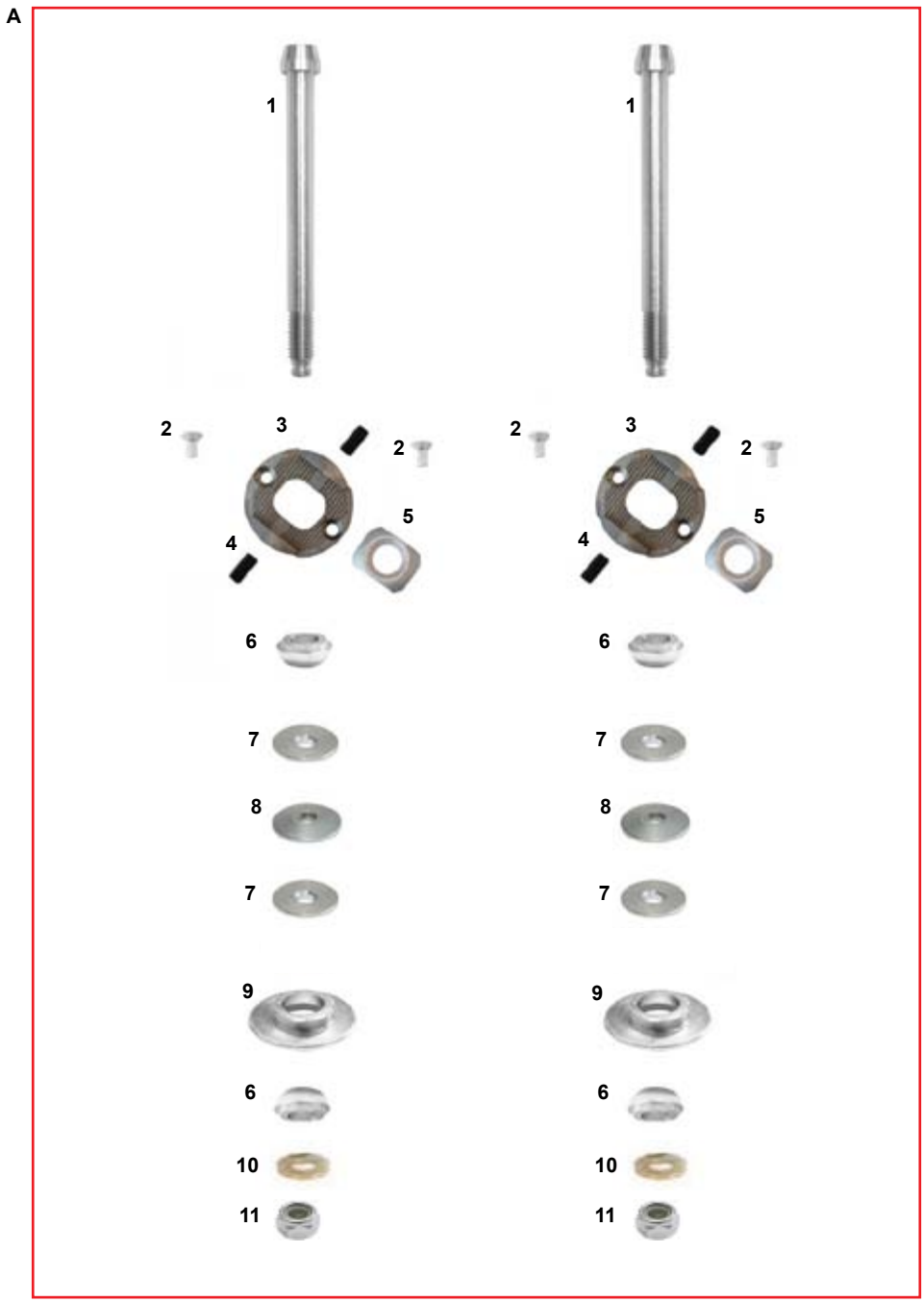

ES	COD.	DESCRIZIONE	ITEMS
A	FK0.01017	Caster mini Sniper completo	Sniper caster system mini comp.
1	FBN.02391	Vite fusello 8x110 caster mini	Stub axle bolt mini 8x110 black
2	AFN.02408	Vite M 4x 8 svasata	M 4x 8 countersunk head screw
3	AFS.02352	Caster porta piastrina A	Caster support A
4	AFN.02390	Grani M 5x10 caster doppio	Grub screw M 5x10 double caster (set)
5	AFS.02353	Caster piastrina alta B	Caster high B
6	FZ0.02666	Boccola mezza sfera caster	Bushing half caster
7	FZ0.03152	Spessore 8-28x3 fusello piano	Stub axle spacer 8-28x3 plain
8	FZ0.03147	Spessore 8-28x6 fusello conico	Stub axle spacer 8-28x6 conical
9	FZ0.01602	Caster fisso sferico	Caster fixed
10	AFN.00108	Rondella 8,5-18x2	Washer 8,5-18x2
11	AFN.00128	Dado M 8 autobloccante alto	Nut M 8 High self-locking

FUSELLO MINI 8.17- STUB AXLE 8.17

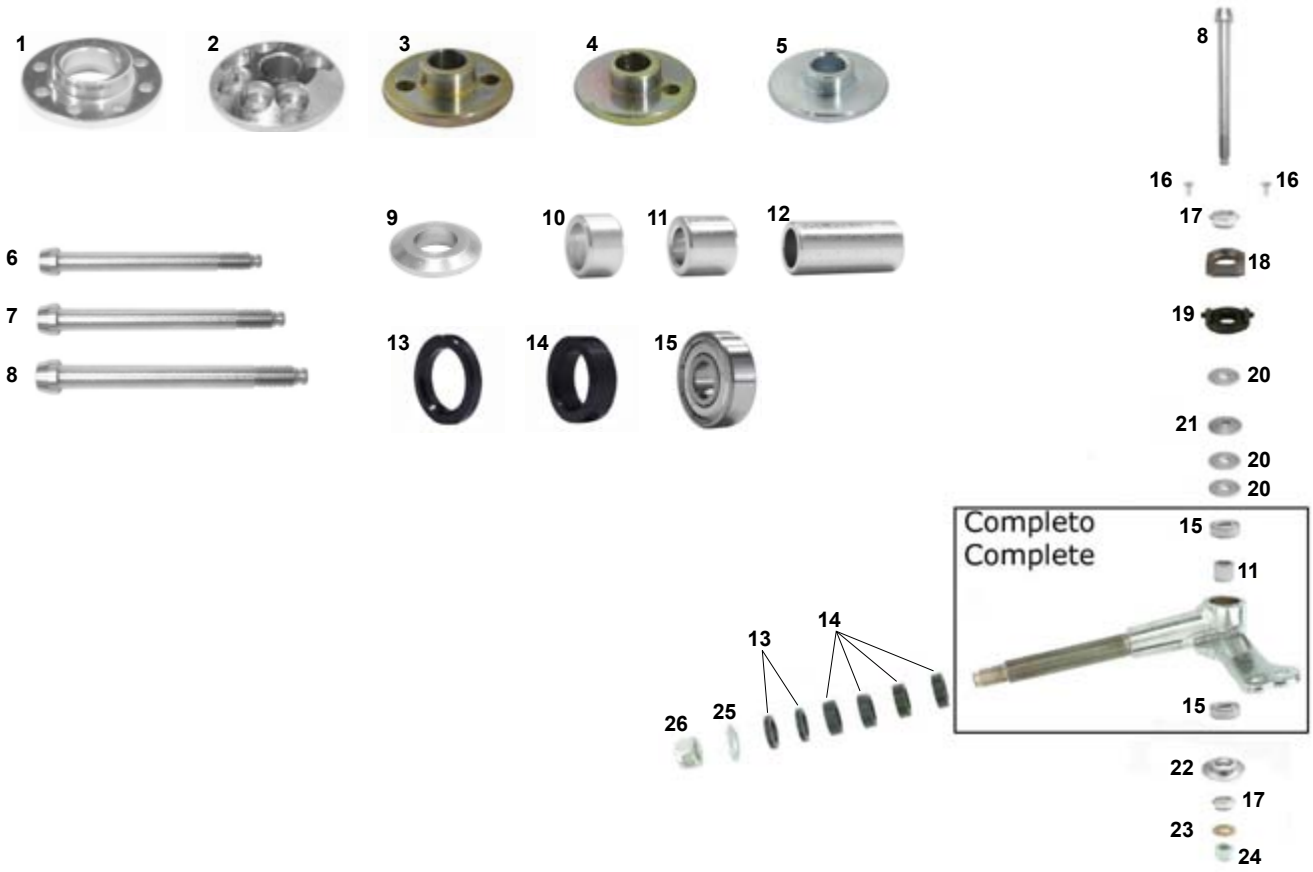

ES	COD.	DESCRIZIONE	ITEMS
1	FZ0.01603	Caster eccentrico 8F sferico	8 hole spherical cam
2	FL2.2467D	Caster eccentrico 6F destro	6 hole cam right
	FL2.2467S	Caster eccentrico 6F sinistro	6 hole cam left
3	FZ0.01351	Caster acqua	2 hole cam (wet)
4	FZ0.01352	Caster eccentrico 1 foro	1 hole cam
5	FZ0.01353	Caster fisso	Fixed cam
6	FBN.01197	Vite fusello 8x 75	Stub axle bolt 8x 75
7	FBN.00176	Vite fusello 8x 85	Stub axle bolt 8x 85
8	FBN.00063	Vite fusello 8x100	Stub axle bolt 8x100
9	FBN.00064	Spessore 8,5-18x4 fusello	Spacer 8,5-18x4 stub axle
10	SBN.00089	Spessore 8x7 interno fusello	Stub axle internal spacer 8x7
11	SBN.00056	Spessore 8x12 interno fusello	Stub axle internal spacer 8x12
12	SBN.01043	Spessore 8x26 interno fusello mini	Stub axle internal spacer 8x26 mini
13	FAN.00068	Distanziale perno fusello 4mm nero	Stub axle spacer 4mm black
14	FAN.00066	Distanziale perno fusello 8mm nero	Stub axle spacer 8mm black
15	AFN.00055	Cuscinetto 608 fusello	608 bearing for spindle
16	AFN.00278	Vite M 4x6 cilindrica	M 4x6 socket head screw
17	FZ0.02666	Boccola mezza sfera caster foro D8	Bushing half spherical caster D8
18	AFS.02353	Caster piastrina alta B	Caster high B
19	FM0.02352	Caster porta piastrina A	Caster support A
20	FZ0.03152	Spessore 8-28x3 fusello piano	Stub axle spacer 8-28x3 plain
21	FZ0.03147	Spessore 8-28x6 fusello conico	Stub axle spacer 8-28x6 conical
22	FZ0.01602	Caster fisso sferico	Spherical fixed cam
23	AFN.00108	Rondella 8,5-18x2	Washer 8,5-18x2
24	AFN.00128	Dado M 8 autoblock alto	Nut M 8 high self-locking
25	AFN.01564	Rondella 15-30x2,5	Washer 15-30x2,5
26	AFN.00058	Dado M14x 1,5 autoblock	Nut M14x 1,5 self-locking

FUSELLO 10.25 - STUB AXLE 10.25

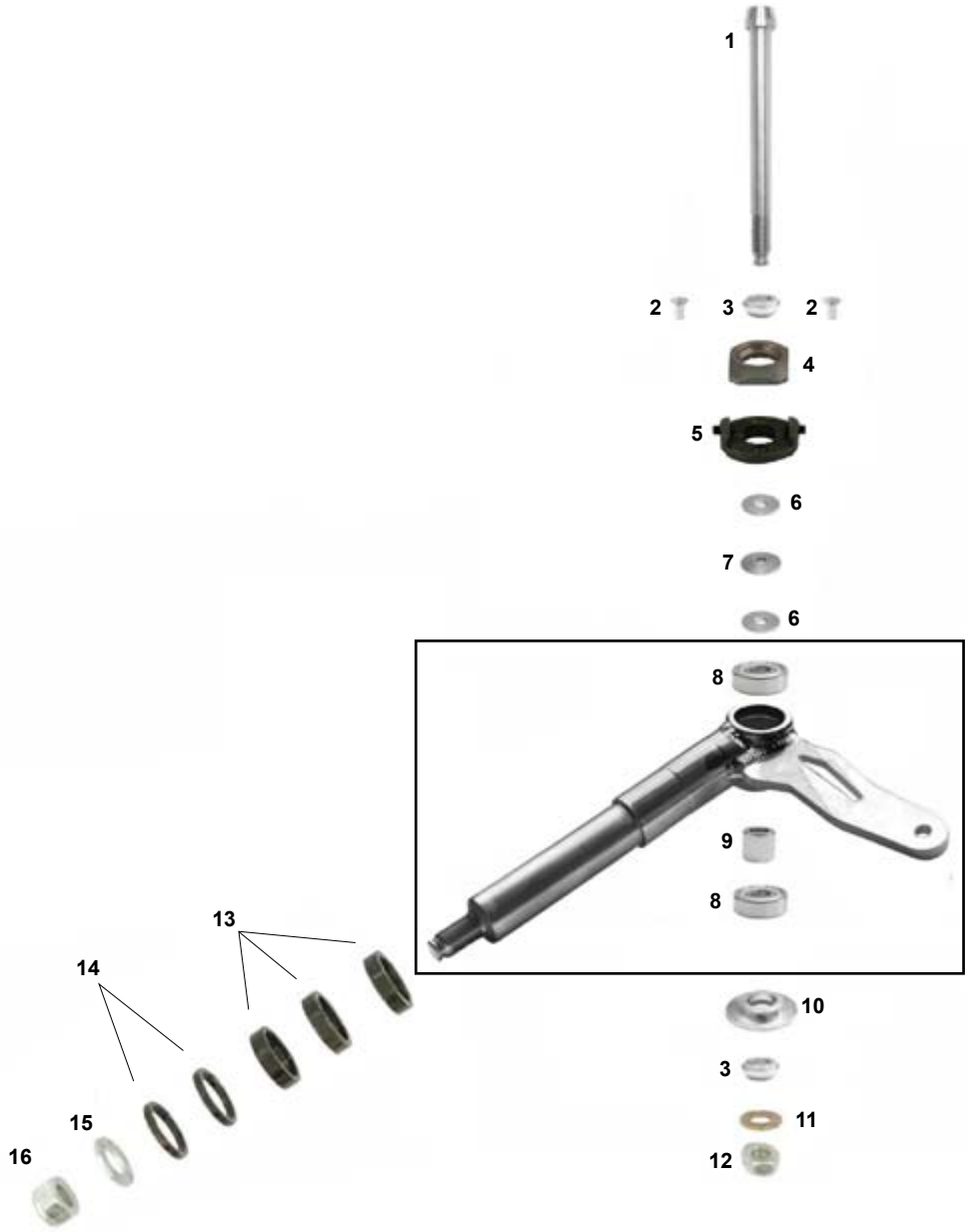

ES	COD.	DESCRIZIONE	ITEMS
1	FBN.02401	Vite fusello 10x110	Stub axle bolt 10x110
1	FBN.02755	Vite fusello 10x120	Stub axle bolt 10x120
2	AFN.02389	Vite M 4x10 svasata	M 4x10 countersunk head screw
3	FZ0.02450	Boccola mezza sfera caster	Bushing half spherical caster
4	AFS.02353	Caster piastrina alta B	Caster high B
5	FM0.02352	Caster porta piastrina A + grani	Caster support A + grub
6	FZ0.01607	Spessore 10-28x6 fusello piano	Stub axle spacer 10-28x6 plain
6	FZ0.01769	Spessore 10-28x3 fusello piano	Stub axle spacer 10-28x3 plain
7	FZ0.01719	Spessore 10-28x6 fusello conico	Stub axle spacer 10-28x6 conical
7	FZ0.01770	Spessore 10-28x3 fusello conico	Stub axle spacer 10-28x3 conical
8	AFN.00959	Cuscinetto 6000 ZZ fusello	Bearing 6000 stub axle bolt
9	SBN.01605	Spessore 10x24 interno fusello	Stub axle internal spacer 10x24
10	FZ0.01602	Caster fisso sferico	Spherical fixed cam
11	AFN.00108	Rondella 8,5-18x4	Washer 8,5-18x4
12	AFN.02393	Dado M10 autoblock alto	Nut M10 high self-locking
13	FAN.01739	Distanziale perno fusello 25 8mm	Stub axle spacer 25 8mm black
14	FAN.01738	Distanziale perno fusello 25 4mm	Stub axle spacer 25 4mm black
15	AFN.01564	Rondella 15-30x2,5	Washer 15-30x2,5
16	AFN.00058	Dado M14x 1,5 autoblock	Nut M14x 1,5 self-locking

FUSELLI - STUB AXLES

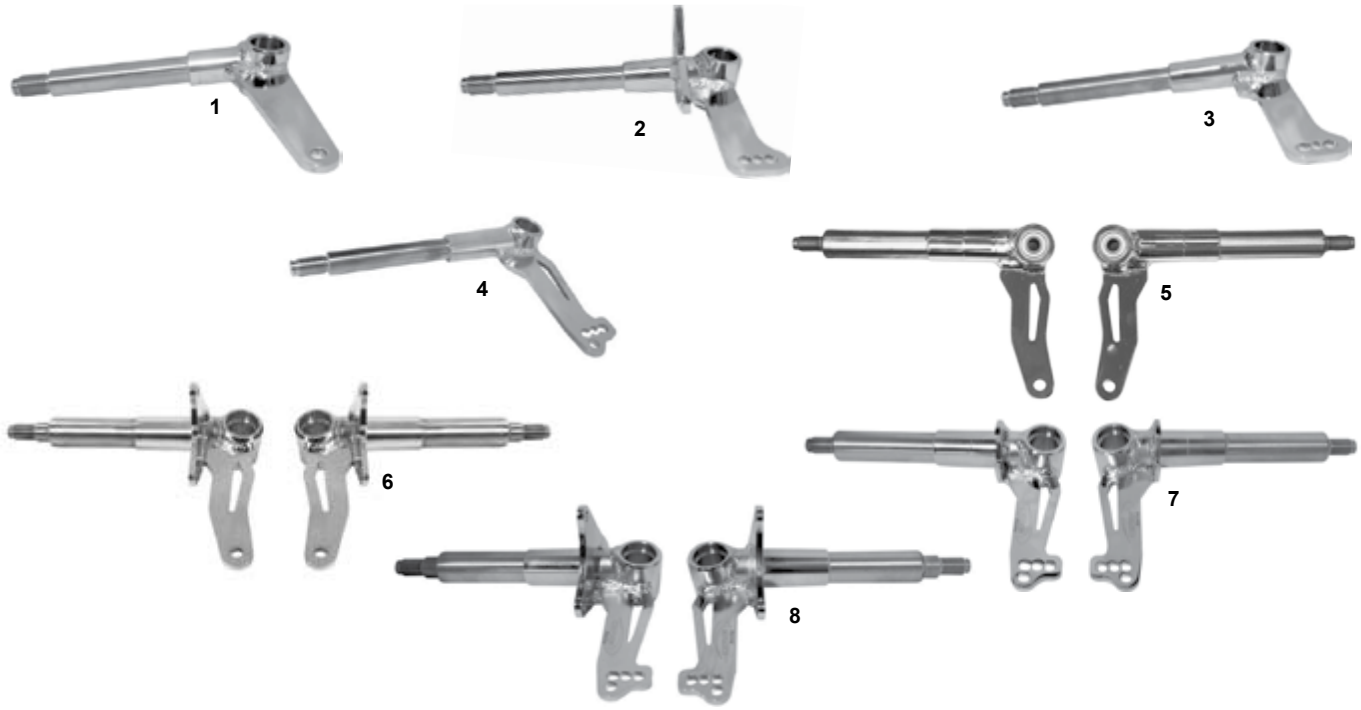

ES	COD.	DESCRIZIONE	ITEMS
1	FM0.0719D	Fusello miniclass destro completo	Stub axle miniclass right complete
1	FM0.0719S	Fusello miniclass sinistro completo	Stub axle miniclass left complete
2	FM0.2008D	Fusello V08 8-17 destro completo	Stub axle V08 8-17 right complete
2	FM0.2008S	Fusello V08 8-17 sinistro completo	Stub axle V08 8-17 left complete
3	FM0.0054D	Fusello mini 8-17 D 3F dx completo	Stub axle mini D 8-17 rh complete
3	FM0.0054S	Fusello mini 8-17 D 3F sx completo	Stub axle mini D 8-17 lf complete
4	FM0.1337D	Fusello mini dx compl. Hero	Stub axle mini rh compl. Hero
4	FM0.1337S	Fusello mini sx compl. Hero	Stub axle mini lf compl. Hero
5	FM0.2869D	Fusello DD RX 10-25 dx completo D	Stub axle DD RX 10-25 rh complete D
5	FM0.2869S	Fusello DD RX 10-25 sx completo D	Stub axle DD RX 10-25 lf complete D
5	FM0.2870D	Fusello DD RX 10-25 dx completo B	Stub axle DD RX 10-25 rh complete B
5	FM0.2870S	Fusello DD RX 10-25 sx completo B	Stub axle DD RX 10-25 lf complete B
6	FM0.2868D	Fusello KZ RX 10-25 dx completo D	Stub axle KZ RX 10-25 rh complete D
6	FM0.2868S	Fusello KZ RX 10-25 sx completo D	Stub axle KZ RX 10-25 lf complete D
6	FM0.3515D	Fusello KZ RX 10-25 dx completo B	Stub axle KZ RX 10-25 lf complete B
6	FM0.3515S	Fusello KZ RX 10-25 sx completo B	Stub axle KZ RX 10-25 lf complete B
7	FM0.2866D	Fusello DD 10-25 dx completo D	Stub axle DD 10-25 rh complete D
7	FM0.2866S	Fusello DD 10-25 sx completo D	Stub axle DD 10-25 lf complete D
7	FM0.1754D	Fusello DD 10-25 dx completo B	Stub axle DD 10-25 rh complete B
7	FM0.1754S	Fusello DD 10-25 sx completo B	Stub axle DD 10-25 lf complete B
7	FM0.2000D	Fusello DD 10-25 dx completo C CADET	Stub axle DD 10-25 rh complete C CADET
7	FM0.2000S	Fusello DD 10-25 sx completo C CADET	Stub axle DD 10-25 lf complete C CADET
8	FM0.2865D	Fusello KZ 10-25 dx completo D	Stub axle KZ 10-25 rh complete D
8	FM0.2865S	Fusello KZ 10-25 sx completo D	Stub axle KZ 10-25 lf complete D
8	FM0.2001D	Fusello KZ 10-25 dx completo C	Stub axle KZ 10-25 rh complete C
8	FM0.2001S	Fusello KZ 10-25 sx completo C	Stub axle KZ 10-25 lf complete C
8	FM0.2016D	Fusello KZ 10-25 dx completo B	Stub axle KZ 10-25 rh complete B
8	FM0.2016S	Fusello KZ 10-25 sx completo B	Stub axle KZ 10-25 lf complete B

Lettera	Grado di inclinazione
B	10,25
C	10,5
D	11

Letter	Degree of inclination
B	10,25
C	10,5
D	11

Tutti i fuselli sono disponibili anche non completi con il cod. iniziale “SC0” - All the stub axle are also available not complete with the part cod. starting with “SC0”

*** Fuselli senza piastrina supporto freno anteriore DD - I fuselli con piastrina supporto freno anteriore sono disponibili solo su richiesta.**
Stub axles without front brake support plate – the stub axles without front brake support plate are available only upon request.

CERCHI - RIMS

1

2

3

4

5

6

7

8

9

ES	COD.	DESCRIZIONE	ITEMS
1	FK0.04036	Set cerchi MG H132-H212 CRG	MG rims set H132-H212 CRG
1	AFS.01695	Set cerchi pioggia MG H130-H180	Wet rims set H130-H180
2	FM0.00455	Cerchio all. H110 mini completo	Al. rear rim H110 mini complete
3	FM0.01186	Cerchio all. H140 mini completo	Al. rear rim H140 mini complete
4	FM0.03791	Cerchio MG h 132 ant. CRG med. compl.	Mg front rim H132 CRG complete
5	AFS.00944	Cerchio H180 mg no razze	Mg rear rim H180 solid
6	FM0.03790	Cerchio MG H212post. CRG conico compl.	Mg rear rim H212 CRG complete
7	CRG.00173	Vite M 5x12 cerchio completa + or	M 5x12 wheel screw assay + or
8	AFS.00168	Valvola tubless	Tubless valve
9	AFN.00008	Cuscinetto 6003 mozzo anteriore	Bearing 6003 front hub

MOZZI ANTERIORI - FRONT WHEEL HUBS

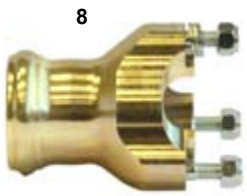

ES	COD.	DESCRIZIONE	ITEMS
1	FMN.00840	Mozzo anteriore DD 17 corto completo	Front hub DD 17 short complete
2	FMN.00124	Mozzo anteriore DD 17 medio completo	Front hub DD 17 medium complete
3	FMN.00841	Mozzo anteriore DD 17 lungo completo	Front hub DD 17 long complete
4	FMN.00321	Mozzo anteriore KZ 40x80 completo	Front hub KZ 40x80 complete
5	FMN.01762	Mozzo anteriore DD 25x80 completo	Front hub DD 25x80 complete
6	FMN.01773	Mozzo anteriore DD 25 lungo completo	Front hub DD 25 complete
7	FMN.01865	Mozzo anteriore DD 25x99 completo	Front hub DD 25x99 complete
8	AFS.03413	Mozzo ant. OKJ 25x82mm R-line MG	Magn. front hub OKJ 25x82 R-line MG
9	AFS.03412	Mozzo ant. DD-KZ 40x80mm R-line MG	Magn. front hub 40x80 R-line MG
10	AFS.01089	Mozzo ant. KZ 40x96 MG	Magn. front hub KZ 40x96 complete
	AFN.00008	Cuscinetto 6003 mozzo ant. D17	Bearing 6003 front hub D17
	AFN.01750	Cuscinetto 61905 ZZ mozzo ant. D25	Bearing 6905 ZZ front hub D25
11	AFN.02879	Cuscinetto 6805 mozzo ant. D25	Bearing 6805 front wheel hub D25
12	AFS.00126	Prigioniero M8	Stud M8
13	AFN.00520	Dado M8 autofrenante flangiato rame	M8 copper brake-block

MOZZI POSTERIORI NERI - REAR WHEEL HUBS BLACK

ES	COD.	DESCRIZIONE	ITEMS
1	FMN.00568	Mozzo posteriore 25x 40 nero completo	Rear hub 25x 40 black complete
2	FMN.00851	Mozzo posteriore 25x 75 nero completo	Rear hub 25x 75 black complete
3	FMN.00930	Mozzo posteriore 30x 35 nero completo	Rear hub 30x 35 black complete
4	FMN.00850	Mozzo posteriore 30x 40 nero completo	Rear hub 30x 40 black complete
5	FMN.00735	Mozzo posteriore 30x 75 nero completo	Rear hub 30x 75 black complete
6	FMN.00848	Mozzo posteriore 40x 75 nero completo	Rear hub 40x 75 black complete
7	FMN.00444	Mozzo posteriore 40x105 nero completo	Rear hub 40x105 black complete
8	**FMN.04160**	Mozzo posteriore 40x125 nero 2 viti compl	Rear hub 40x125 black 2 screws compl.
9	FMN.00843	Mozzo posteriore 50x 75 nero completo	Rear hub 50x 75 black complete
10	FMN.00131	Mozzo posteriore 50x 95 nero completo	Rear hub 50x 95 black complete
11	FMN.00846	Mozzo posteriore 50x105 nero completo	Rear hub 50x105 black complete
12	FMN.01721	Mozzo posteriore 50x125 nero completo	Rear hub 50x125 black complete
13	FMN.01922	Mozzo post. 50x 95 flangiato completo	Rear hub 50x 95 flang. complete
14	FMN.01923	Mozzo post. 50x 85 flangiato completo	Rear hub 50x 85 flang. complete

MOZZI POSTERIORI - REAR WHEEL HUBS

1

2

3

4

5

6

7

8

9

10

11

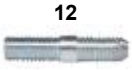
12

13

ES	COD.	DESCRIZIONE	ITEMS
1	FMG.00851	Mozzo posteriore 25 x 75 oro comp.	Al. rear wheel hub 25 x 75 gold comp.
2	FMG.00850	Mozzo posteriore 30 x 40 oro comp.	Al. rear wheel hub 30 x 40 gold comp.
3	AFS.03416	Mozzo posteriore 40x95 R-line MG	Magnesium rear hub 40x 95 R-line
	AFS.03929	Mozzo posteriore 40x105 R-line MG	Magnesium rear hub 40x 105 R-line
4	AFS.03568	Mozzo posteriore 50x85 R-line MG	Magnesium rear hub 50x85 R-line
	AFS.03411	Mozzo posteriore 50x95 R-line MG	Magnesium rear hub 50x95 R-line
5	AFS.03567	Mozzo posteriore 50x105 R-line MG	Magnesium rear hub 50x105 R-line
6	AFS.03696	Mozzo posteriore 50x115 R-line MG	Magnesium rear hub 50x115 R-line
7	AFS.03477	Mozzo posteriore 50x120 R-line MG	Magnesium rear hub 50x120 R-line
8	**AFS.04155**	Mozzo posteriore 50x120 2 vite R-line MG	Magnesium rear hub 50x120 R-line 2 screws
9	AFS.02657	Mozzo posteriore 50x100 1 vite	Magnesium rear hub 50X100 1 screw
10	AFS.02658	Mozzo posteriore 50x100 2 vite	Magnesium rear hub 50X100 2 screws
11	AFS.02659	Mozzo posteriore 50x116 3 vite	Magnesium rear hub 50X116 3 screws
12	AFS.00126	Prigioniero M8	Stud M8
13	AFN.00520	Dado M8 autofrenante flang.rame	M8 copper brake-block
	AFN.02640	Grano M6x16 std	Grub screw M6x16 std

MOZZI CORONA - RING CARRIER

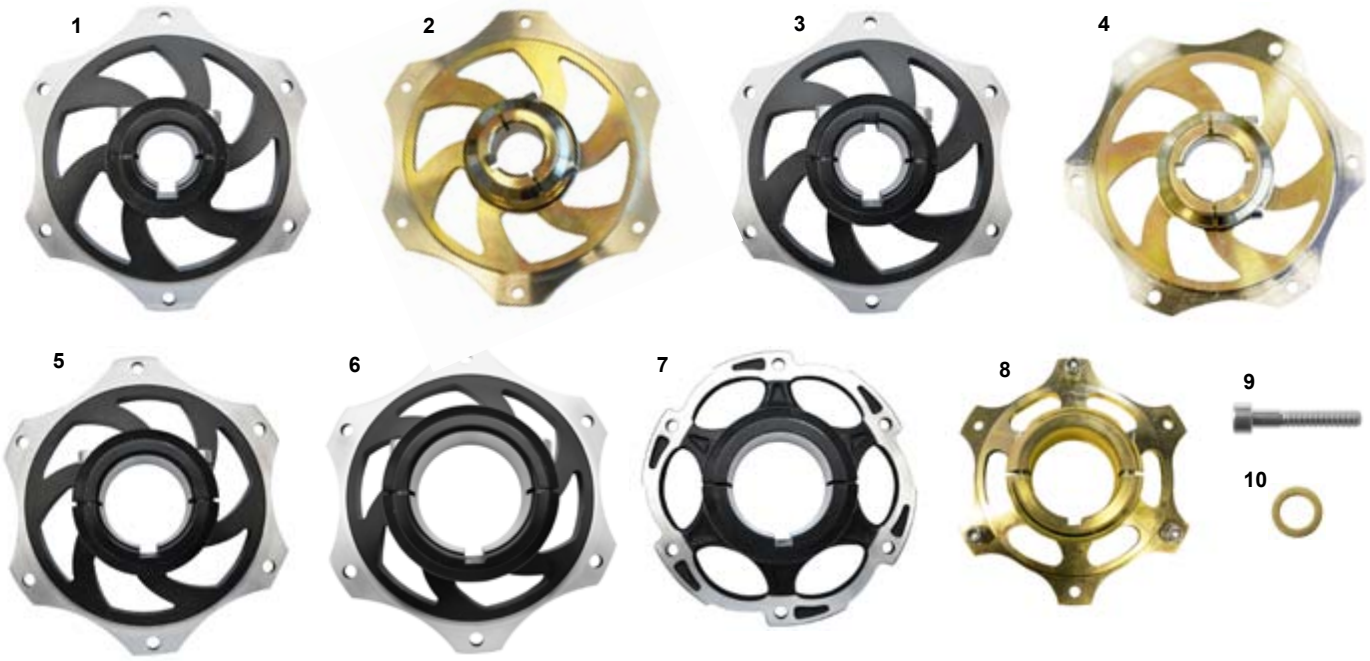

ES	COD.	DESCRIZIONE	ITEMS
1	CRG.00569	Mozzo corona 25 Puffo CRG	Sprocket carrier Puffo 25 CRG
2	FMG.G0569	Mozzo corona 25 ORO	Sprocket carrier 25 GOLD
3	CRG.00736	Mozzo corona 30 DD CRG	Sprocket carrier DD 30 CRG
4	FMG.G0736	Mozzo corona 30 ORO completo	Sprocket carrier 30 GOLD complete
5	CRG.00445	Mozzo corona 40 DD CRG	Sprocket carrier DD 40 CRG
6	FMN.00135	Mozzo corona 50 DD completo	Sprocket carrier DD 50 complete
7	CRG.00025	Mozzo corona 50 DD CRG forgiato	Sprocket carrier DD 50 CRG forged
8	AFS.03415	Mozzo corona 50 R-line MG	Sprocket carrier 50 R-line MG
9	AFN.02154	Vite M 6x 35 cilindirca 12.9	M 6x 35 socket head screw 12.9
10	AFN.00136	Rondella 6,5-10x1 ottone	Brass washer 6,5-10x1
	FM0.00839	Mozzo corona 45 DD CRG	Sprocket carrier DD 45 CRG

MOZZI DISCO - BRAKE DISC HUBS

ES	COD.	DESCRIZIONE	ITEMS
1	AFN.00008	Cuscinetto 6003 mozzo anteriore	Bearing 6003 front hub
2	AFN.01750	Cuscinetto 6905 mozzo anteriore	Bearing 6905 front hub
3	AFN.00137	Vite M 6x 35 cilindrica	M 6x 35 socket head screw
4	AFN.02154	Vite M 6x 35 cilindirca 12.9	M 6x 35 socket head screw 12.9
5	AFN.00136	Rondella 6,5-10x1 ottone	Brass washer 6,5-10x1
6	SAN.01893	Mozzo disco anteriore alluminio V05	Alu.front brake disc hub V05
6	FMN.01893	Mozzo disco anteriore all. V05 comp.	Alu.front brake disc hub V05 complete
7	SDN.02876	Mozzo disco anteriore alluminio DD	Alu.front brake disc hub DD
7	FM0.02876	Mozzo disco anteriore all. DD completo	Alu.front brake disc hub DD complete

MOZZI DISCO - BRAKE DISC HUBS

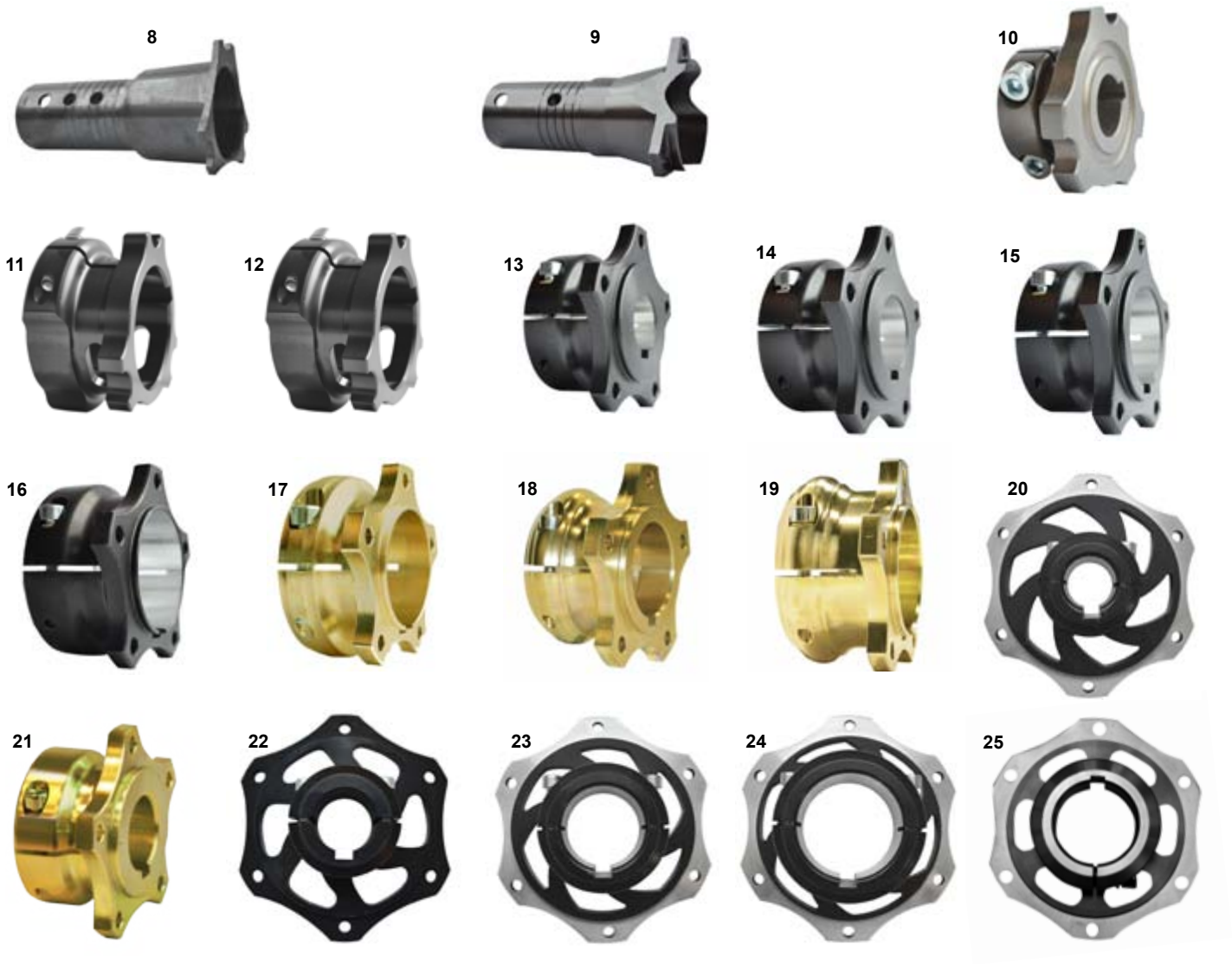

ES	COD.	DESCRIZIONE	ITEMS
8	AFS.01756	Mozzo disco anteriore ferro V04 25	Metal front brake disc hub V04 25
9	FM0.01756	Mozzo disco anteriore ferro V04 25 comp.	Metal front brake disc hub V04 25 compl.
10	AFS.02018	Mozzo disco anteriore ferro V08 17	Metal front brake disc hub V08 17
10	FM0.02018	Mozzo disco anteriore ferro V08 17 comp.	Metal front brake disc hub V08 17 compl.
11	FM0.00835	Mozzo disco posteriore 25 cadet completo	Rear brake disc hub cadet 25 complete
11	FMN.00837	Mozzo disco posteriore ferro 40 up comp.	Rear brake disc hub up 40 complete
12	FM0.00371	Mozzo disco posteriore ferro 50 up comp.	Rear brake disc hub up 50 complete
13	FMN.00838	Mozzo disco posteriore all.25 V04 comp.	Rear brake disc hub V04 25 al. complete
14	FMN.00748	Mozzo disco posteriore all.30 V04 comp.	Rear brake disc hub V04 30 al. complete
15	FMN.01250	Mozzo disco posteriore all.40 V04 comp.	Rear brake disc hub V04 40 al. complete
16	FMN.00238	Mozzo disco posteriore all.50 V04 comp.	Rear brake disc hub V04 50 al. complete
17	AFS.02847	Mozzo disco posteriore magnesio 40	Magn. brake disc hub 40
18	AFS.01007	Mozzo disco posteriore magnesio 50	Magn. brake disc hub 50
19	AFS.03417	Mozzo disco posteriore 40 R-line MG	Magn. brake disc hub 40 R-line
19	AFS.03414	Mozzo disco posteriore 50 R-line MG	Magn. brake disc hub 50 R-line
20	FMN.00585	Mozzo disco posteriore all. 25 comp.	Alu. rear brake disc hub 25 complete
21	FMG.G0748	Mozzo disco posteriore all.30 mini oro comp.	Alu. rear brake disc hub mini 30 gold comp.
22	FMN.00834	Mozzo disco posteriore all.30 V08 comp.	Alu. rear brake disc hub 30 V08 complete
23	FMN.00453	Mozzo disco posteriore all.40 V08 comp.	Alu. rear brake disc hub 40 V08 complete
24	FMN.00832	Mozzo disco posteriore all.50 V08 comp.	Alu. rear brake disc hub 50 V08 complete
25	FMN.00839	Mozzo disco posteriore 45 Al Puffo	Rear brake disc hub Puffo 45 al. complete

VOLANTI & PIANTONI - STEERING WHEELS & COLUMNS

ES	COD.	DESCRIZIONE	ITEMS
1	FC0.00060	Piantone sterzo Puffo	Steering column Puffo
2	FC0.00545	Piantone sterzo mini/baby	Steering column mini/baby
3	FC0.01513	Piantone sterzo DD/KZ	Steering column DD/KZ
4	FC0.00097	Piantone sterzo DD BS-KT1 X2	Steering column DD X2
5	FC0.00104	Piantone sterzo DD BS-KT1 X2+4	Steering column DD X2+4
6	FC0.00883	Piantone sterzo multiforo DD/KZ	Steering column DD/KZ + holes
7	FC0.03795	Piantone sterzo CRG 10	Steering wheel column CRG 10
8	FC0.03796	Piantone sterzo CRG 15	Steering wheel column CRG 15
	FL1.01459	Rinforzo interno piantone nylon D20	Steering wheel column int. D20
9	AFS.00243	Supporto piantone plastica	Steering column plastic support
10	AFN.00154	Seeger D22 piantone	Seeger D22 steering column
11	AFN.00153	Uniball piantone	Steering column bearing
12	FKN.00356	Kit boccola piantone	Steering column lock ring kit
	FAN.00356	Boccola piantone nera	Steering column lock ring black
	AFN.00093	Dado M 6	Nut M 6
	AFN.00357	Grano M 6x10	Grub screw M 6x10
13	FAN.00893	Mozzo volante DD/KZ nero	Steering wheel hub DD/KZ black
14		Mozzo volante inclinato	Steering wheel hub inclined
15	FAG.01626	Mozzo volante oro inclinato	Steering wheel hub inclined gold
16	AFS.00537	Volante Puffo	Steering wheel Puffo
17	AFS.01955	Volante diesis CRG carbon mini 320	Steering wheel 320 carbon look mini
18	AFS.02887	Volante diesis CRG carbon 340	Steering wheel 340 carbon look
19	AFS.03442	Volante diesis 320 2016	Steering wheel 320 2016
20	AFS.03392	Volante diesis 340 2016	Steering wheel 340 2016

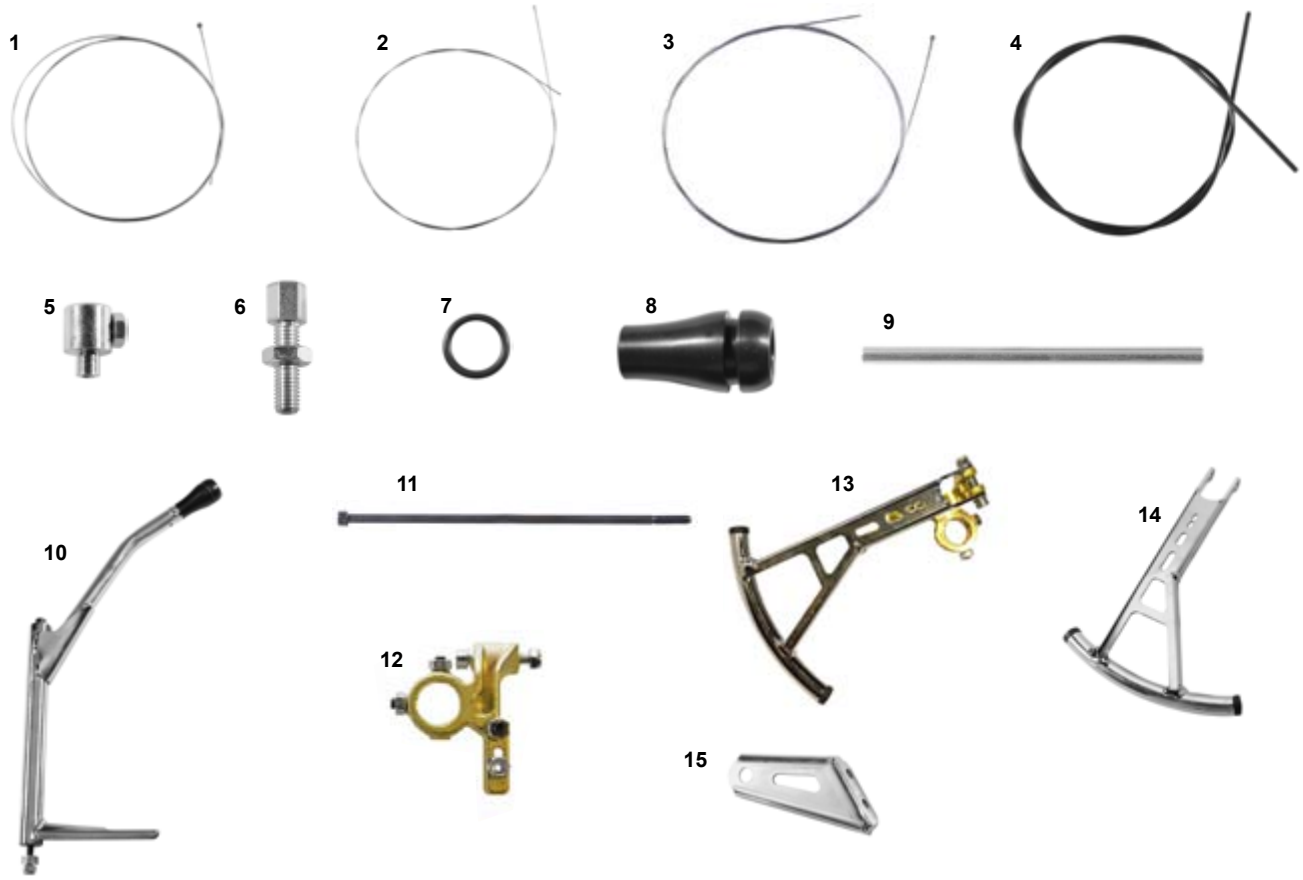

ES	COD.	DESCRIZIONE	ITEMS
1	AFS.00515	Filo gas	Gas cable
2	AFS.01364	Filo frizione	Clutch cable
3	AFS.00590	Filo freno meccanico	Brake cable
4	AMS.00516	Guaina filo D6 frizione	Outer cable D6 for clutch
4	AMS.01370	Guaina filo D5 gas	Outer cable D5 for gas cable
4	AMS.00591	Guaina filo D7 gas	Outer cable D7 clutch
5	AFS.00514	Morsetto filo	Cable clamp
6	AFS.00257	Registro filo M6	Cable adjuster M6
7	AFN.00341	Or pomolo leva cambio	O-ring for gear lever pommel
8	SAN.01766	Pomolo leva cambio nero	Gear lever handle
9	SZ0.00342	Spessore interno leva cambio KZ	Int.spacer for shifter KZ
10	FMN.00339	Leva cambio CRG KZ nera completa	Gear lever CRG KZ black complete
	SC0.00339	Leva cambio CRG KZ nuda	Gear lever CRG KZ
	SAN.00348	Asta leva cambio KZ nera	Gear rod KZ black
11	FBN.00340	Vite leva cambio KZ nera	KZ gear lever screw black
12	FKG.01925	Kit attacco leva frizione oro	Clutch lever supp.
13	CRG.03465	Leva frizione completa oro	Clutch lever comp. supp.
14	FK0.02929	Leva frizione con tappi	Clutch lever
15	FK0.01840	Piastrina leva cambio completa	Gear lever support
	FK0.01925	Kit attacco leva frizione nero	Clutch comp. supp. black
	CRG.02929	Leva frizione completa	Clutch lever complete

PEDALI - PEDALS

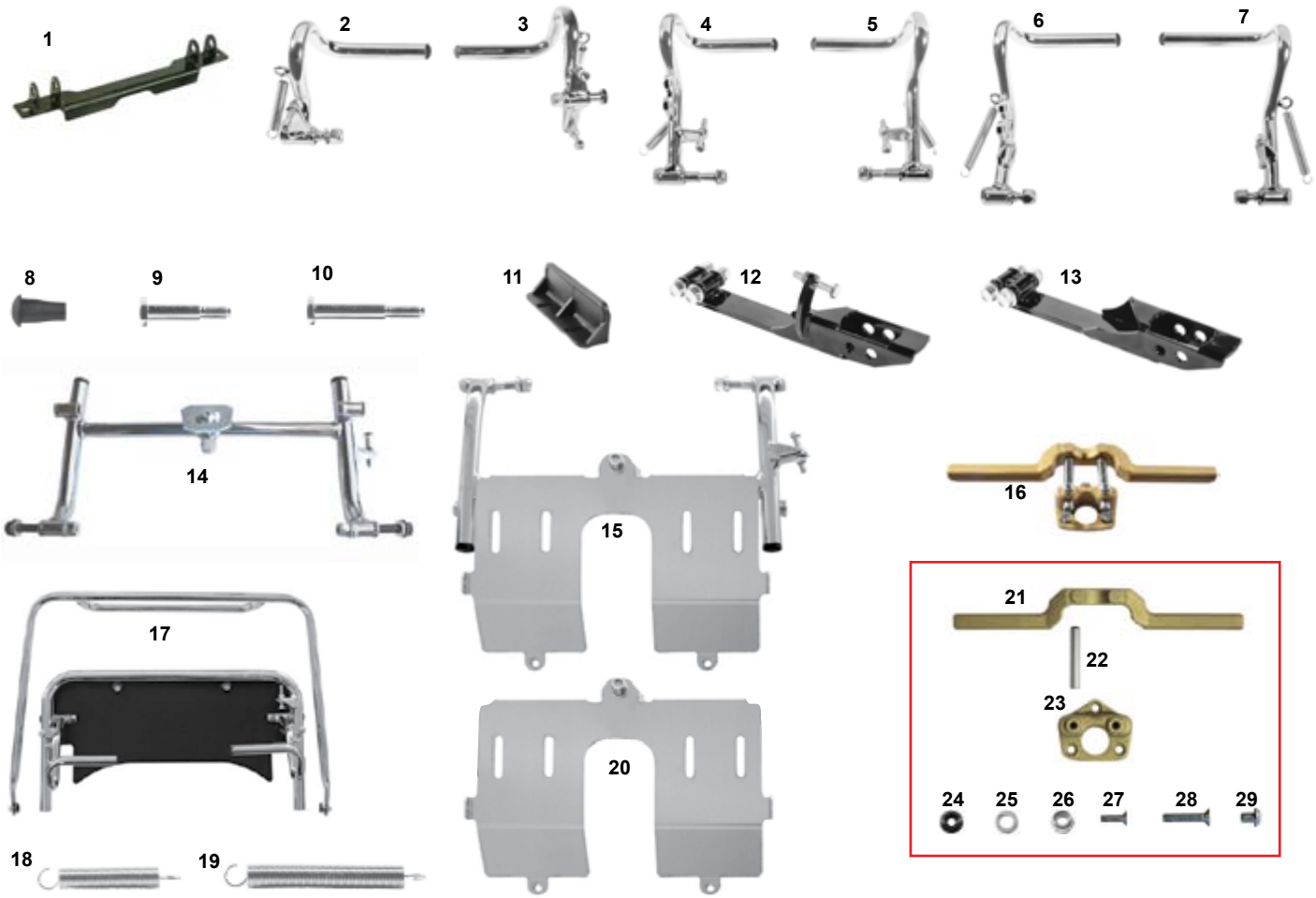

ES	COD.	DESCRIZIONE	ITEMS
1	FVN.01783	Pedaliera Puffo	Foot pedal support Puffo
2	FK0.00270	Pedale Puffo freno completo	Foot brake pedal Puffo complete
3	FK0.00268	Pedale Puffo gas completo	Gas pedal Puffo complete
4	FK0.01550	Pedale mini freno completo	Foot brake pedal mini NA complete
5	FK0.01549	Pedale mini gas completo	Gas pedal mini NA complete
6	FK0.03473	Pedale completo CRG 2016 freno	2016 brake pedal std compl.
7	FK0.03472	Pedale completo CRG 2016 gas	2016 gas pedal std compl.
8	AFS.00082	Tappino pedale gas/freno	Pedal cap gas/brake
9	SBN.00080	Perno pedale corto	Pedal bolt short
10	SBN.00271	Perno pedale lungo	Pedal bolt long
11	AFS.00245	Poggiapiedi plastica	Plastic feet support
12	FMN.1429D	Pedaliera arretrata destra completa	Pedal ext. kit right complete
13	FMN.1429S	Pedaliera arretrata sinistra completa	Pedal ext. kit left complete
14	FM0.01587	Pedaliera arretrata mini/baby completa	Pedal ext. kit mini/baby complete
15	FK0.01587	Pedaliera mini xs con poggiapiedi	Pedal ext. kit with feet support
16	FMG.02738	Poggiapiedi regolabile oro completo	Adjustable feet support gold complete
17	FK0.01652	Kit estensione telaio NA2	Exten.kit x chassis with pedals NA2
18	FZ0.00272	Molla pedale corta	Short pedal spring
19	FZ0.00085	Molla pedale lunga	Long pedal spring
20	AML.03024	Poggiapiedi arretrato pedale mini Honda	Mini Honda adjustable feet support
21	SAG.02738	Poggiapiedi regolabile all. oro	Adjustable feet supp. gold
22	SBN.02739	Perno guida poggiapiedi	Feet support slider
23	SAG.02737	Supporto poggiapiedi regolabile all. oro	Feet support mount gold
24	SAN.00249	Rondella 6 svasata nera	Washer 6 countersunk black
25	AFN.00105	Rondella 6,5 - 12x1,5	Washer 6,5 - 12x1,5
26	AFN.00264	Dado M 6 autoblock alto	Nut M 6 high self - locking
27	AFN.00261	Vite M 6x20 svasata	M 6x20 countersunk head screw
28	AFN.00499	Vite M 6x30 svasata	M 6x30 countersunk head screw
29	AFN.02761	Vite M 8x10 bombata	M 8x10 convex head screw

PIANALE - FLOOR TRAY

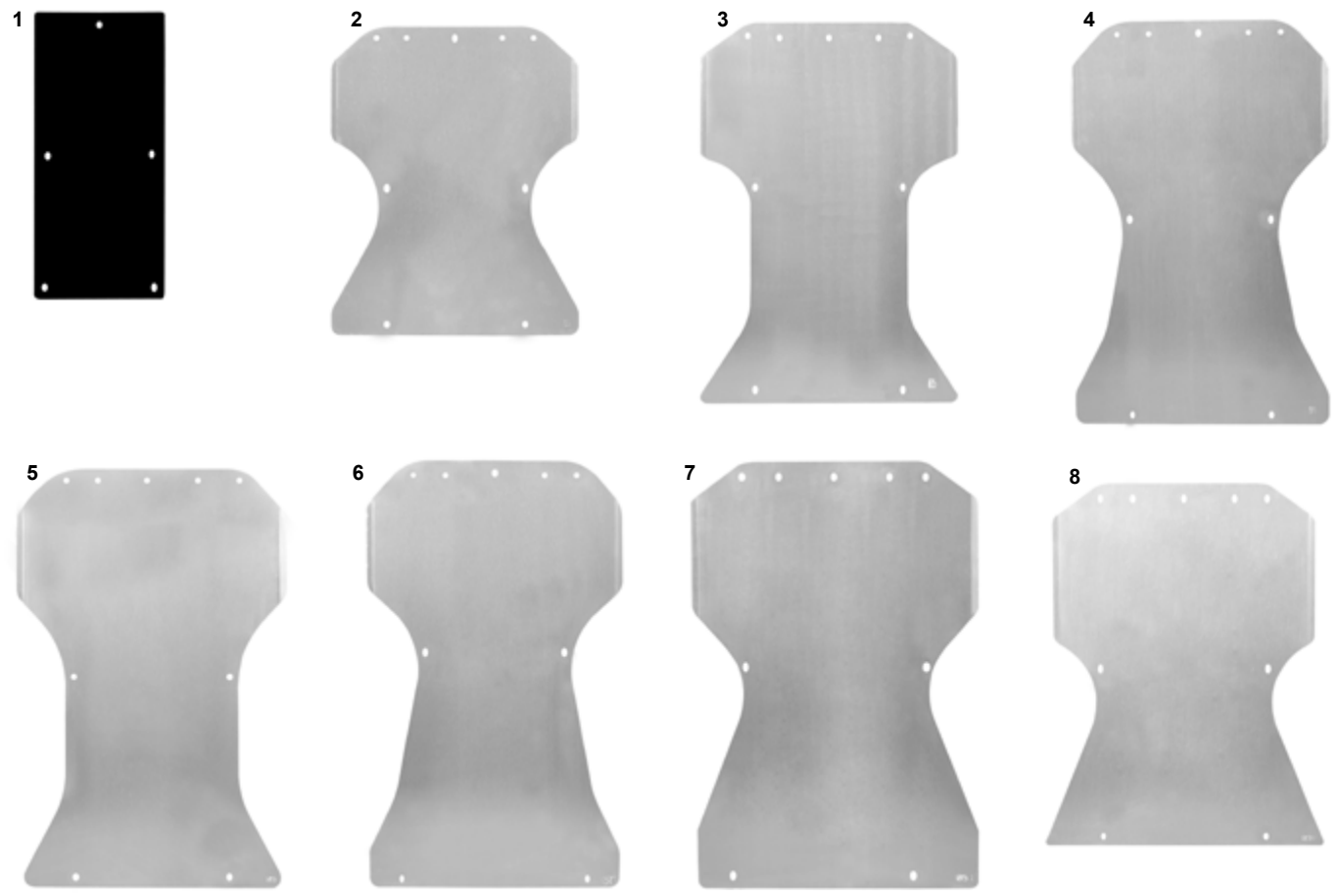

ES	COD.	DESCRIZIONE	ITEMS
1	FV0.00054	Pianale Puffo nero	Floor tray Puffo
2	AML.00873	Pianale baby NA neutro	Floor tray baby NA neutral
3	AML.02423	Pianale mini NA3	Floor tray mini NA3 neutral
4	AML.00544	Pianale mini NA neutro	Floor tray mini NA neutral
5	AML.01565	Pianale mini junior neutro	Floor tray mini junior neutral
6	AML.00716	Pianale miniclass 101 standard neutro	Floor tray miniclass 101 standard neutral
7	AML.00680	Pianale mini hero evo neutro	Floor tray mini hero evo neutral
8	AML.02438	Pianale mini hero neutro	Floor tray mini hero neutral

PIANALE - FLOOR TRAY

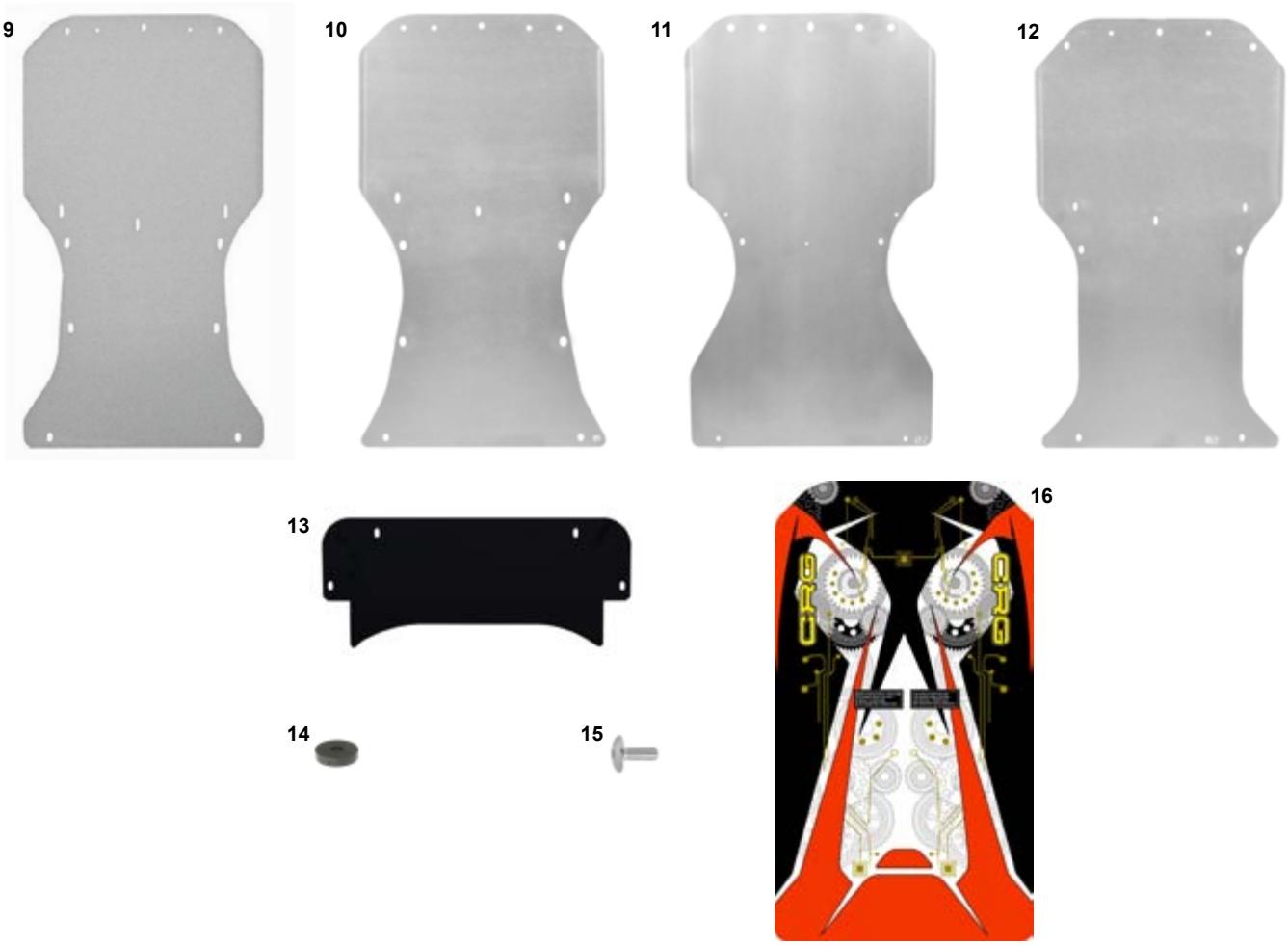

ES	COD.	DESCRIZIONE	ITEMS
9	AML.02920	Pianale Road Rebel tg neutro	Floor tray Road Rebel tg neutral
10	AML.01507	Pianale havana/braga/zuera DD2	Floor tray havana/braga/zuera DD2
11	AML.00388	Pianale kalifornia neutro	Floor tray kalifornia neutral
	AML.02908	Pianale KT3-LH3	Floor tray KT3-LH3
12	AML.00574	Pianale BS/KT2 X2 neutro Gem Star	Floor tray BS/KT2 X2 neutral Gem Star
13	FAN.02256	Pianale estensione	Extention floor tray
14	AFS.00258	Gommino pianale	Floor tray rubber
15	AFS.00261	Vite testa tonda larga M 6x 16 pianale	Floor tray screw M 6x16
16	AFS.03434	Adesivo pianale CRG 2016	Floor tray CRG sticker

SEDILI - SEATS

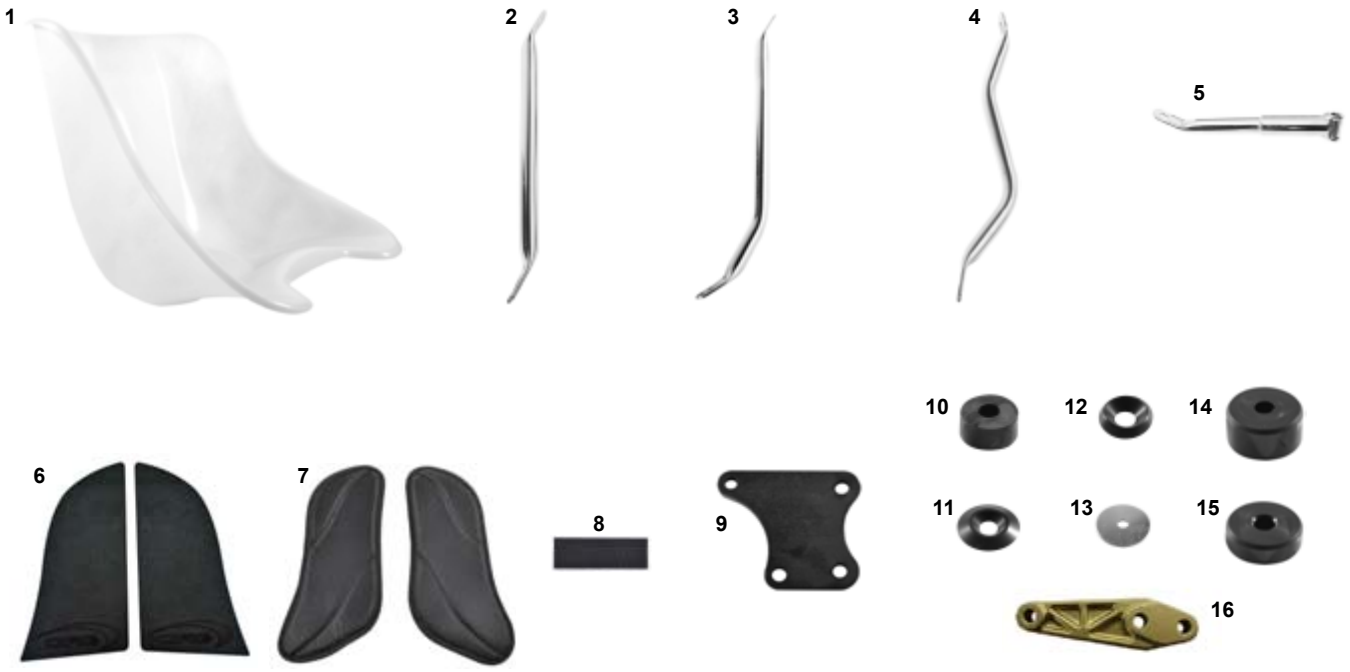

ES	COD.	DESCRIZIONE	ITEMS
1	AFS.00166EV00	Sedile resina 23-23,5 Puffo	Resin seat 23-23,5 Puffo
1	AFS.00166EV02	Sedile resina 26-27 mini	Resin seat 26-27 mini
1	AFS.00166EV03	Sedile resina 28,5-29,5	Resin seat 28,5-29,5
1	AFS.00166EV04	Sedile resina 30,5-31,5	Resin seat 30,5-31,5
1	AFS.00166EV05	Sedile resina 32-33	Resin seat 32-33
1	AFS.00166EV06	Sedile resina 33-34	Resin seat 33-34
1	AFS.00166EV07	Sedile resina 34-35,5	Resin seat 34-35,5
2	FC0.01390	Rinforzo sedile 26 diritto	Straight seat support 26
2	FC0.01391	Rinforzo sedile 28 diritto	Straight seat support 28
2	FC0.01392	Rinforzo sedile 30 diritto	Straight seat support 30
2	FC0.01393	Rinforzo sedile 32 diritto	Straight seat support 32
2	FC0.01394	Rinforzo sedile 34 diritto	Straight seat support 34
3	FC0.01389	Rinforzo sedile 32 curvo	Curved seat support 32
3	FC0.00752	Rinforzo sedile 34 curvo	Curved seat support 34
4	FC0.01006	Rinforzo sedile 32 max destro	Max seat support right side 32
5	FC0.01879	Rinforzo sedile 21 DD2 max	DD2 seat support right side 21
6	AFS.03707	Spugna sedile laterale CRG (coppia)	CRG side seat sponge (pairs)
7	AFS.01011	Spugna sedile laterale (coppia)	Side seat sponge (pairs)
8	AFS.01013	Velcro spugna sedile	Velcro
9	SAN.02412	Piastra supporto rinforzo sedile destro	Seat plate support reinforc right
10	AFS.00259	Spessore sedile in gomma	Seat washer (rubber)
11	SAN.00146	Rondella 8 svasata nera	Seat washer 8 countersunk black
12	FAN.00260	Rondella 8 sedile all. nera	Alu seat washer black 8
13	SL1.00683	Rondella 8,5-60x2 sedile cik	Seat washer 8,5-60x2 cik
14	SL1.02025	Spessore attacchi sedile 8,5-30x15	Nylon seat washer 8,5-30x15
15	SL1.02026	Spessore attacchi sedile 8,5-30x10	Nylon seat washer 8,5-30x10
16	FC0.01028	Rinforzo sedile 28 sotto marmitta KZ	Curved seat support 28 KZ exhaust
	FC0.01388	Rinforzo sedile 36 curvo	Curved seat support 36
	FC0.00751	Rinforzo sedile 36 dritto	Straight seat support 36
	FAG.00983	Piastra supporto rinforzo sedile	Plate for seat support rinforcement

PIASTRA MOTORE - ENGINE MOUNT

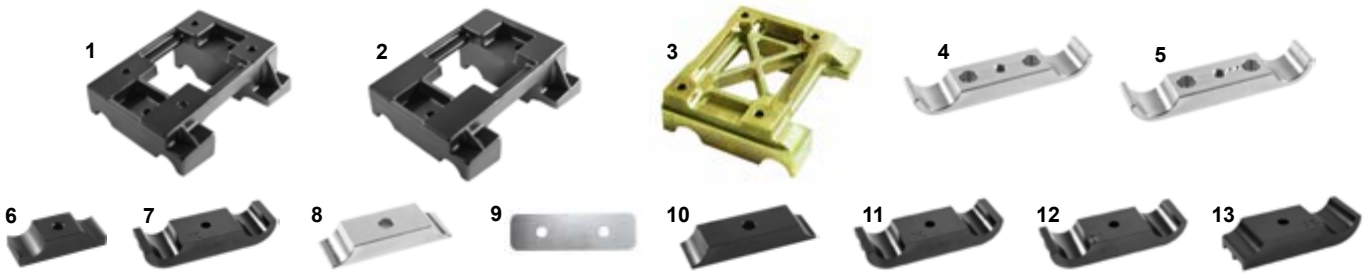

ES	COD.	DESCRIZIONE	ITEMS
1	FFN.01332	Piastra motore 28 mg forata Rotax-X30	Engine mount magn. 28 Rotax-X30
1	FFN.00899	Piastra motore 30 mg forata Rotax-X30	Engine mount magn. 30 Rotax-X30
1	FFN.00072	Piastra motore 32 mg forata Rotax-X30	Engine mount magn. 32 Rotax-X30
2	FFN.01332	Piastra motore 28 mg no fori Rotax-X30	Engine mount no holes magn. 28 Rotax-X30
2	FFN.00899	Piastra motore 30 mg no fori Rotax-X30	Engine mount no holes magn. 30 Rotax-X30
2	FFN.00072	Piastra motore 32 mg no fori Rotax-X30	Engine mount no holes magn. 32 Rotax-X30
3	KF.MG.IAME	Piastra motore OK forata lame	Engine mount OK for lame
4	SC0.02882	Supporto motore posteriore DD2 30	DD2 engine mount 30
4	SC0.02883	Supporto motore posteriore DD2 32	DD2 engine mount 32
5	SZ0.03263	Supporto motore posteriore DD2 30+2	DD2 engine mount 30+2
5	SZ0.03264	Supporto motore posteriore DD2 32+2	DD2 engine mount 32+2
6	FL1.00236	Cavallotto all. Puffo N38E	Engine mount clamp Puffo
7	FFN.01331	Cavallotto motore 28 mg	Engine mount clamp magn. 28
7	FFN.00900	Cavallotto motore 30 mg	Engine mount clamp magn. 30
7	FFN.00074	Cavallotto motore 32 mg	Engine mount clamp magn. 32
8	FBN.01676	Cavallotto motore ferro 28	Engine iron clamp 28
8	FBN.01675	Cavallotto motore ferro 30	Engine iron clamp 30
8	SZ0.01674	Cavallotto motore ferro 32	Engine iron clamp 32
9	SZ0.00974	Piastrina sottomotore DD2	Engine mount plate DD2
10	SAN.02884	Cavallotto motore DD2 30 all.	Engine mount clamp DD2 30 alu.
10	SAN.02885	Cavallotto motore DD2 32 all.	Engine mount clamp DD2 32 alu.
11	FFN.01331	Cavallotto motore 28 mg sm	Engine mount clamp sm magn. 28
12	FFN.00900	Cavallotto motore 30 mg sm	Engine mount clamp sm magn. 30
13	FFN.00074	Cavallotto motore 32 mg sm	Engine mount clamp sm magn. 32

SUPPORTI - SUPPORTS

ES	COD.	DESCRIZIONE	ITEMS
1	FM0.02193	Culla marmitta mini completa	Exhaust cradle mini complete
	SZ0.00123	Culla marmitta	Exhaust cradle
	AFS.00088	Gommino culla marmitta	Exhaust cradle rubber
	SZ0.00122	Molla culla marmitta 10,5 std	Exhaust cradle spring 10,5 std
	AFN.00125	Rondella 10,5-30x2,5	Washer 10,5-30x2,5
	AFN.00127	Vite M 8x 55 bombata	M 8x 55 convex head screw
	AFN.00128	Dado M 8 autobloccante alto	Nut M 8 high self-locking
	AFN.00108	Rondella 8,5-18x2	Washer 8,5-18x2
	AFN.00266	Vite M 8x 40 bombata	M 8x 40 convex head screw
2	FM0.00121	Supporto culla marmitta DD completo	Exhaust cradle support DD complete
3	FAN.00983	Piastra estensione culla	Exhaust cradle extension
4	SZ0.01537	Piastrina supporto marmitta curva	Exhaust support (curved)

SUPPORTI - SUPPORTS

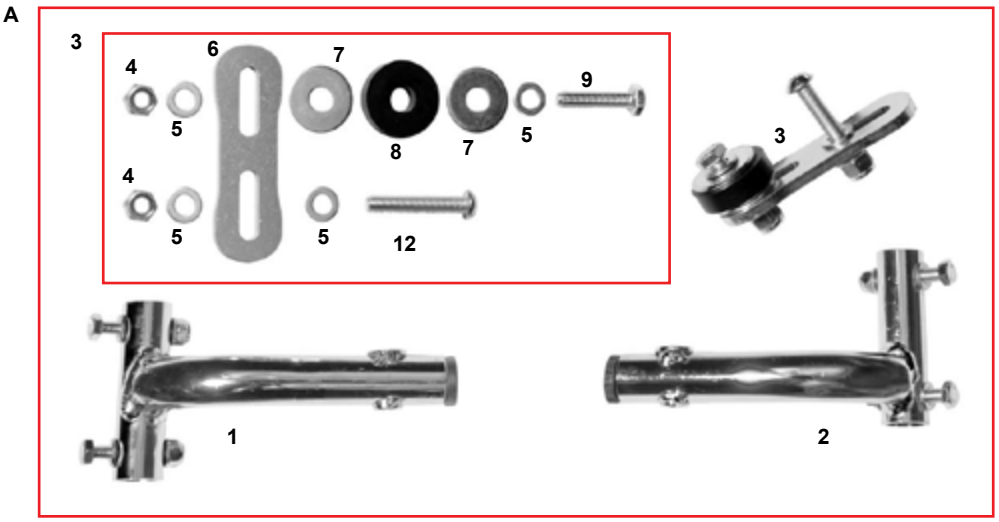

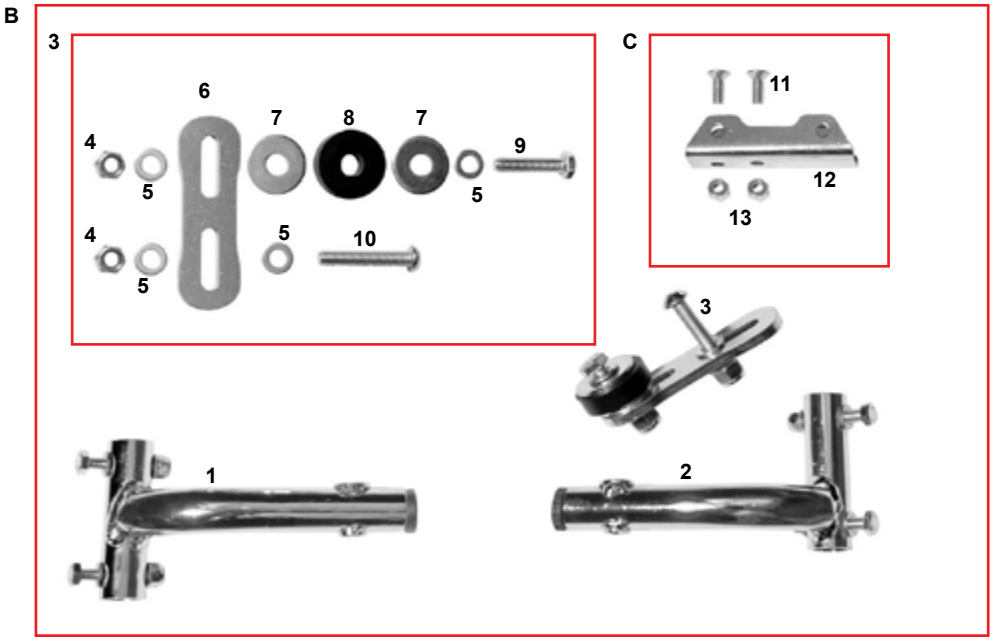

ES	COD.	DESCRIZIONE	ITEMS
A	FM0.01824	Supporto marmitta Rotax new completo	Rotax exhaust support complete
B	FM0.01994	Supporto marmitta Rotax mini completo	Rotax exhaust support/straight old
C	FK0.01823	Attacco supporto marmitta completo	Exhaust support clamp complete
1	FM0.1824S	Supporto marmitta sx tag l. freno comp.	Tag exhaust support lf brake side comp.
2	FM0.1824D	Supporto marmitta dx tag l. freno comp.	Tag exhaust support rh brake side comp.
3	FK0.01994	Kit piastrina marmitta Rotax dx-sx	Exhaust support Rotax mini kit
4	AFN.00128	Dado M 8 autoblock alto	Nut M 8 high self-locking
5	AFN.00350	Rondella 8,5-16x1,5	Washer 8,5-16x1,5
6	SZ0.01535	Piastrina supporto marmitta Rotax	Exhaust support Rotax
7	AFN.00125	Rondella 10,5-30x2,5	Washer 10,5-30x2,5
8	AFS.00088	Gommino culla marmitta	Exhaust cradle rubber
9	AFN.00349	Vite M 8x 35 esagonale	M 8x 35 hexagonal head screw
10	AFN.00266	Vite M 8x 40 bombata	M 8x 40 convex head screw
11	TSV.06X014	Vite M 6x 14 svasata	M 6x 14 countersunk head screw
12	FC0.01823	Attacco supporto marmitta Rotax crom.	Exhaust support Rotax right
13	AFN.00264	Dado M 6 autoblock alto	Nut M 6 high self-locking

SUPPORTI - SUPPORTS

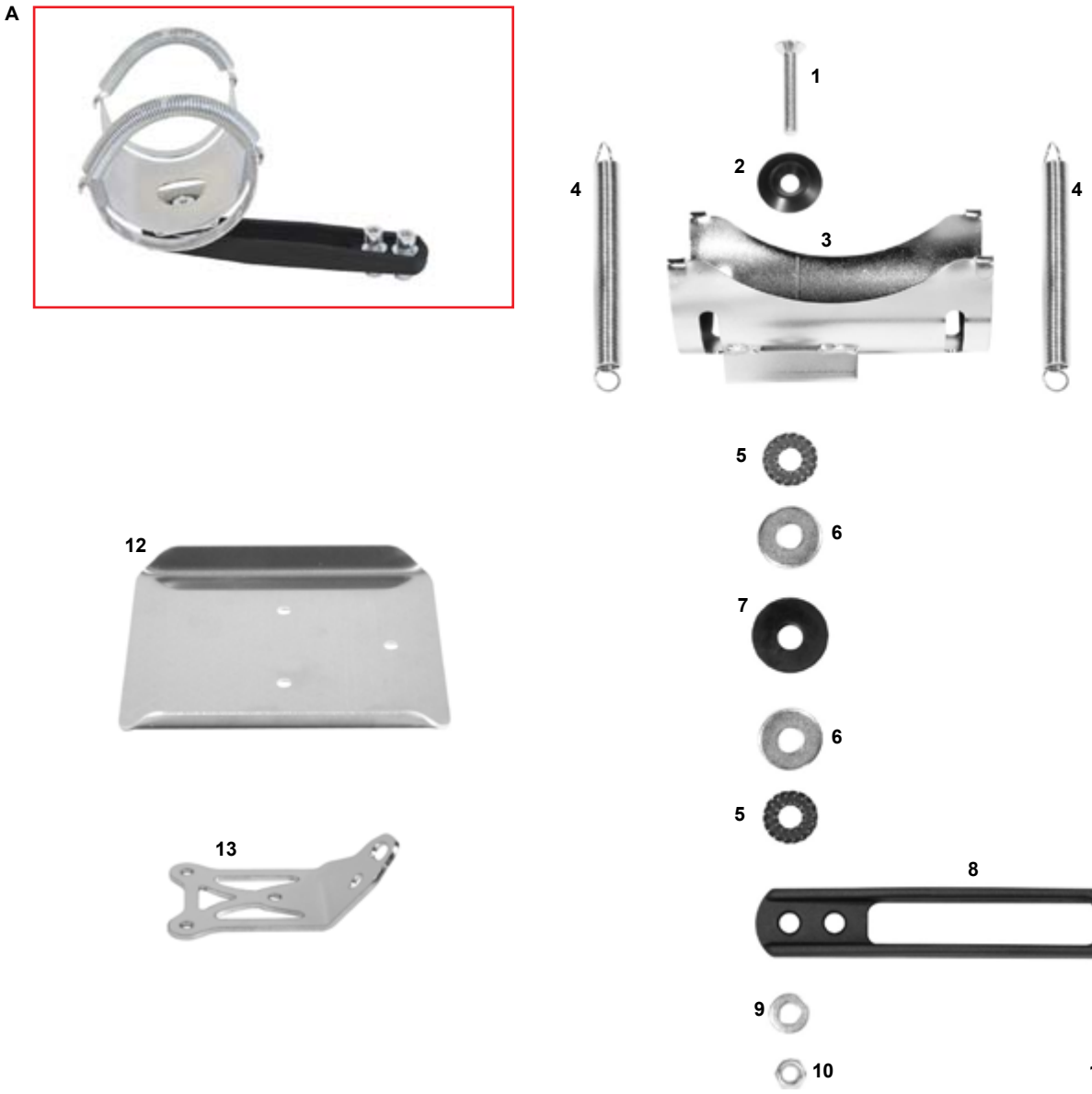

ES	COD.	DESCRIZIONE	ITEMS
A	FM0.02890	Supporto marmitta KZ completo	Exhaust support KZ complete
1	AFN.00291	Vite M 8x 45 svasata	M 8x 45 countersunk head screw
2	FAN.00260	Rondella 8 sedile all. nera	Alu seat washer 8 black
3	SC0.02890	Culla marmitta D100 KZ	Exhaust cradle D100 KZ
4	SZ0.00122	Molla culla marmitta 10,5 std	Exhaust cradle spring 10,5 std
5	AFN.00541	Rondella 10-26 dentellata int.est	Cog washer 10-26 int.-ext.
6	AFN.00125	Rondella 10,5-30x2,5	Washer 10,5-30x2,5
7	AFS.00088	Gommino culla marmitta	Exhaust cradle rubber
8	SAN.02857	Supporto culla silenziatore	Exhaust cradle support black
9	AFN.00108	Rondella 8,5-18x1,5	Washer 8,5-18x1,5
10	AFN.00160	Dado M 8 autoblock basso	Nut M 8 low self-locking
11	AFN.00732	Vite M 8x 30 cilindrica	M 8x 30 socket head screw
12	AML.02932	Deviatore gas scarico	Exhaust silencer deflector
13	AML.02933	Supporto deviatore gas scarico	Silencer deflector support

SUPPORTI - SUPPORTS

A

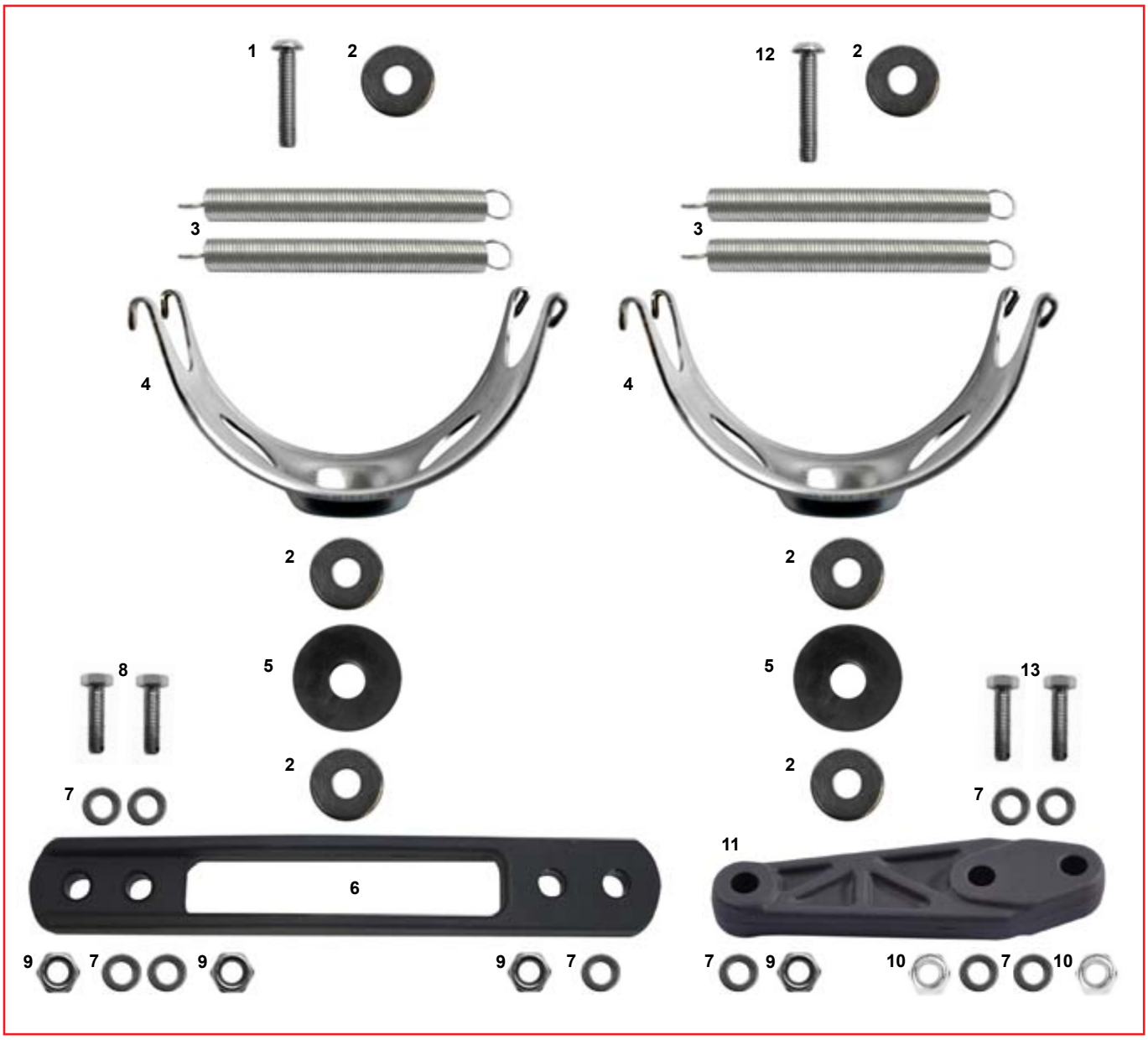

ES	COD.	DESCRIZIONE	ITEMS
A	FM0.03741	Supporto marmitta KZ 2016 completo	Exhaust support KZ 2016 complete
1	AFN.00266	Vite M 8x40 bombata	M 8x40 covex head screw
2	AFN.00125	Rondella 10,5-30x2,5	Washer 10,5-30x2,5
3	SZ0.00122	Molla culla marmitta 10,5 std	Exhaust cradle spring 10,5 std
4	SZ0.00123	Culla marmitta	Cradle spring
5	AFS.00088	Gommino culla marmitta	Exhaust cradle rubber
6	SAN.02857	Supporto culla silenziatore	Exhaust cradle support black
7	AFN.00350	Rondella 8-16x1,5	Washer 8-16x1,5
8	AFN.00307	Vite M 8x30 esagonale	M 8x30 hexagonal head screw
9	AFN.00128	Dado M 8 autoblock alto	Nut M 8 high self-locking
10	AFN.00160	Dado M 8 autoblock basso	Nut M 8 low self-locking
11	FAN.00983	Piastra estensione culla	Extension for cradle
12	AFN.02098	Vite M 8x45 bombata	M 8x45 convex head screw
13	AFN.00349	Vite M 8x35 esagonale	M 8x35 hexagonal head screw

RADIATORE - RADIATOR

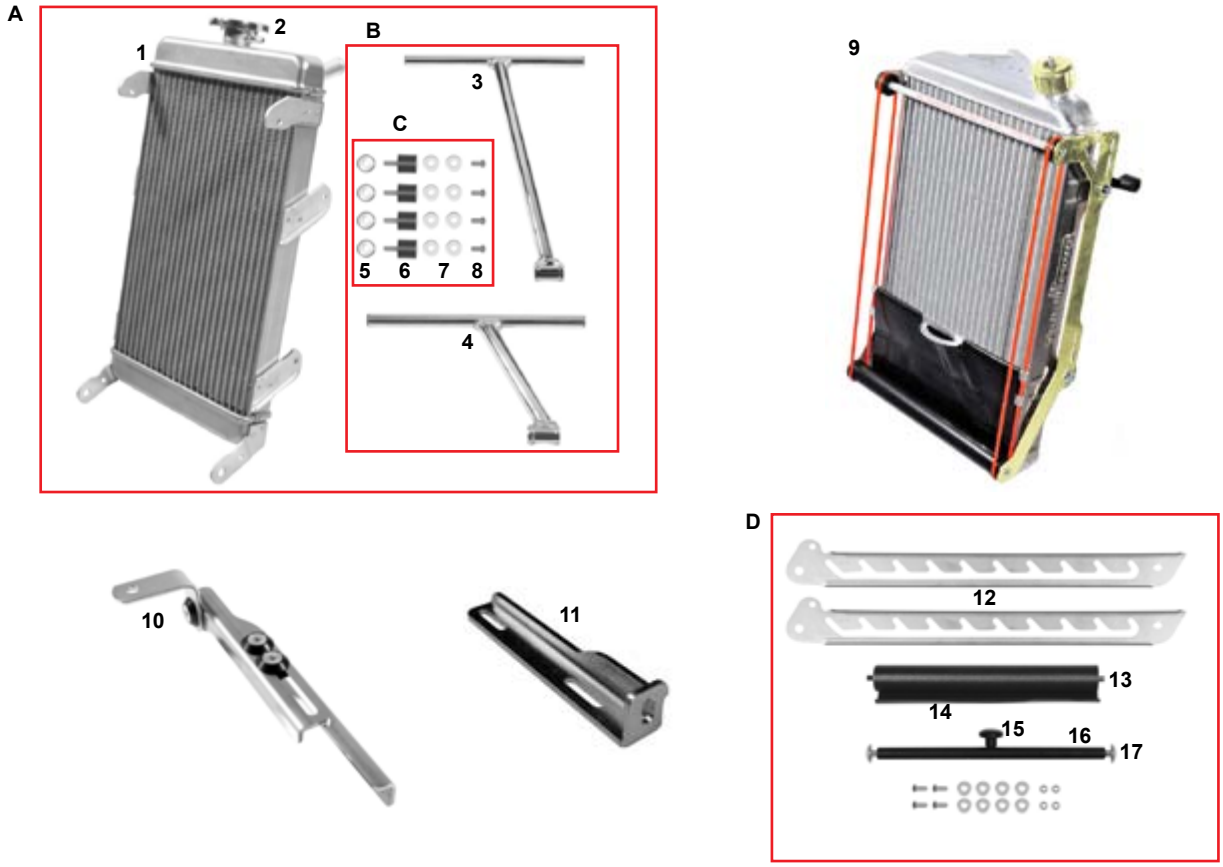

ES	COD.	DESCRIZIONE	ITEMS
A	FM0.00785	Radiatore con attacchi completo	Radiator with connections complete
1	AFS.00785	Radiatore con tappo	Radiator with cap
2	AFS.00756	Tappo radiatore	Radiator cap
B	FK0.00787	Kit attacchi radiatore KZ	Radiator support kit KZ
B	FK0.02597	Kit attacchi radiatore DD	Radiator support kit DD
3	SC0.00789	Supporto radiatore lungo	Long radiator support
4	SC0.02597	Supporto radiatore lungo DD	Long radiator support DD
4	SC0.00788	Supporto radiatore corto KZ	Short radiator support KZ
C	FK0.00760	Kit silentblock radiatore	Radiator silentblock kit
5	SL1.01589	Distanziale 6-20x 3,5	Spacer 6-20x 3,5
6	AFS.00760	Gommino radiatore	Radiator rubber
7	AFN.00105	Rondella 6,5-18x1,5	Washer 6,5-18x1,5
8	AFN.00016	Vite M 6x 14 bombata	M 6x 14 convex head screw
9	FMG.02463	Radiatore racing tendina compl. oro	Racing radiator assy with curtain gold
	AFS.04129	Kit staffe radiatore NewLine oro	Radiator support kit NewLine gold
	AFS.04128	Tappo radiatore NewLine all. oro	Radiator alu cap NewLine gold
	AFS.02464	Tendina radiatore NewLine nera	Radiator curtain NewLine
10	FK0.00021	Supporto radiatore DD2 sup. comp.	Radiator DD2 support top new assay
11	SC0.01700	Supporto radiatore DD2 inferiore	Lower DD2 radiator support
D	FK0.01320	Tendina radiatore completa	Radiator curtain comp.
12	AML.00987	Piastrina tendina radiatore (2)	Radiator curtain support (2)
13	AFS.01329	Bussola tendina radiatore	Radiator curtain bushing
14	AFS.01320	Tendina radiatore nuda	Radiator curtain
15	SAN.01321	Pomolo tendina radiatore nero	Radiator curtain pomml black
16	SAN.01322	Barretta tendina radiatore	Radiator curtain bar
17	SZ0.01323	Vite tendina radiatore	Radiator curtain screw

RADIATORE - RADIATOR

1

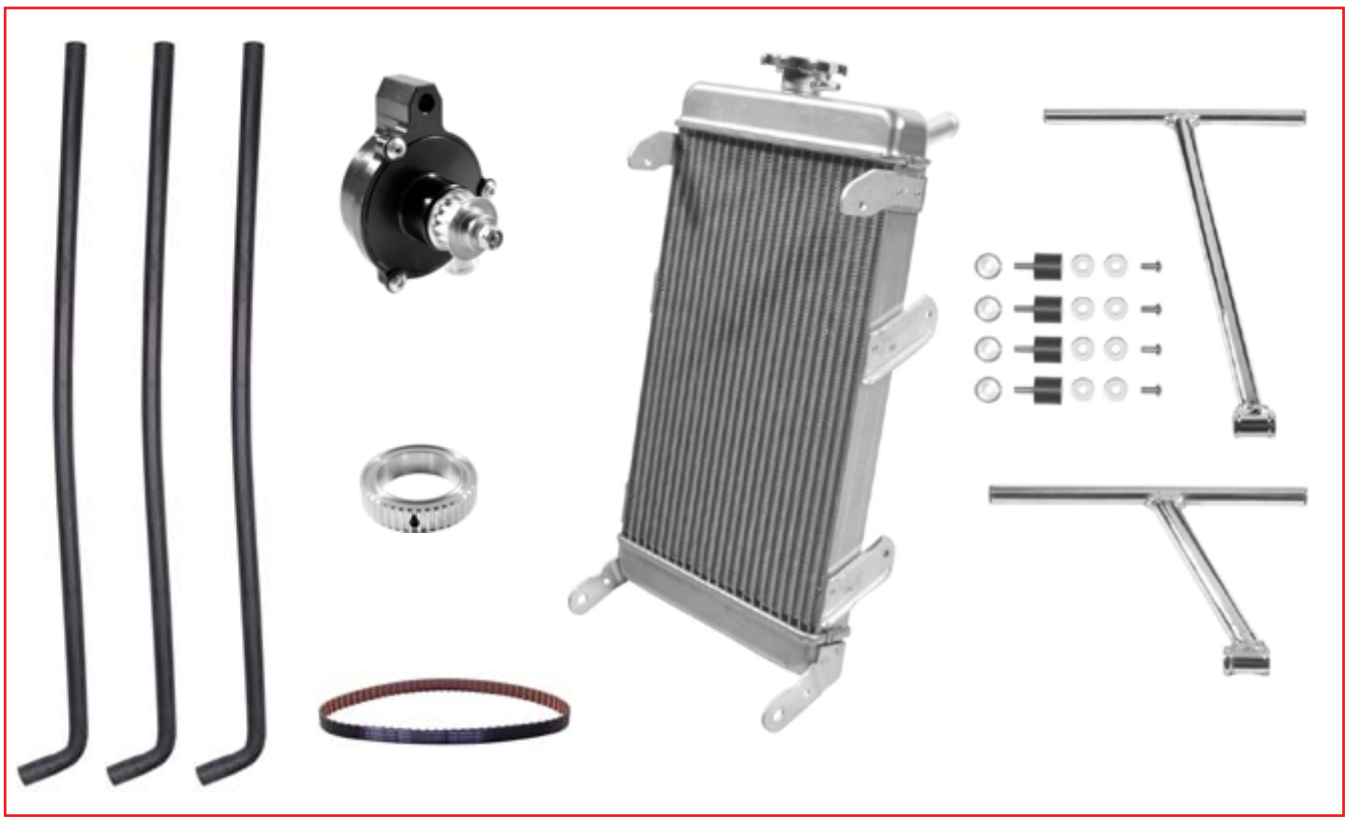

2

ES	COD.	DESCRIZIONE	ITEMS
1	FK0.01818	Kit raffreddamento (rad/pompa/pul/tubi)	Cooling kit standard
2	AML.01961	Riparo radiatore	Radiator guard

VARIE RAFFREDDAMENTO - VARIOUS COOLING SYSTEM ITEMS

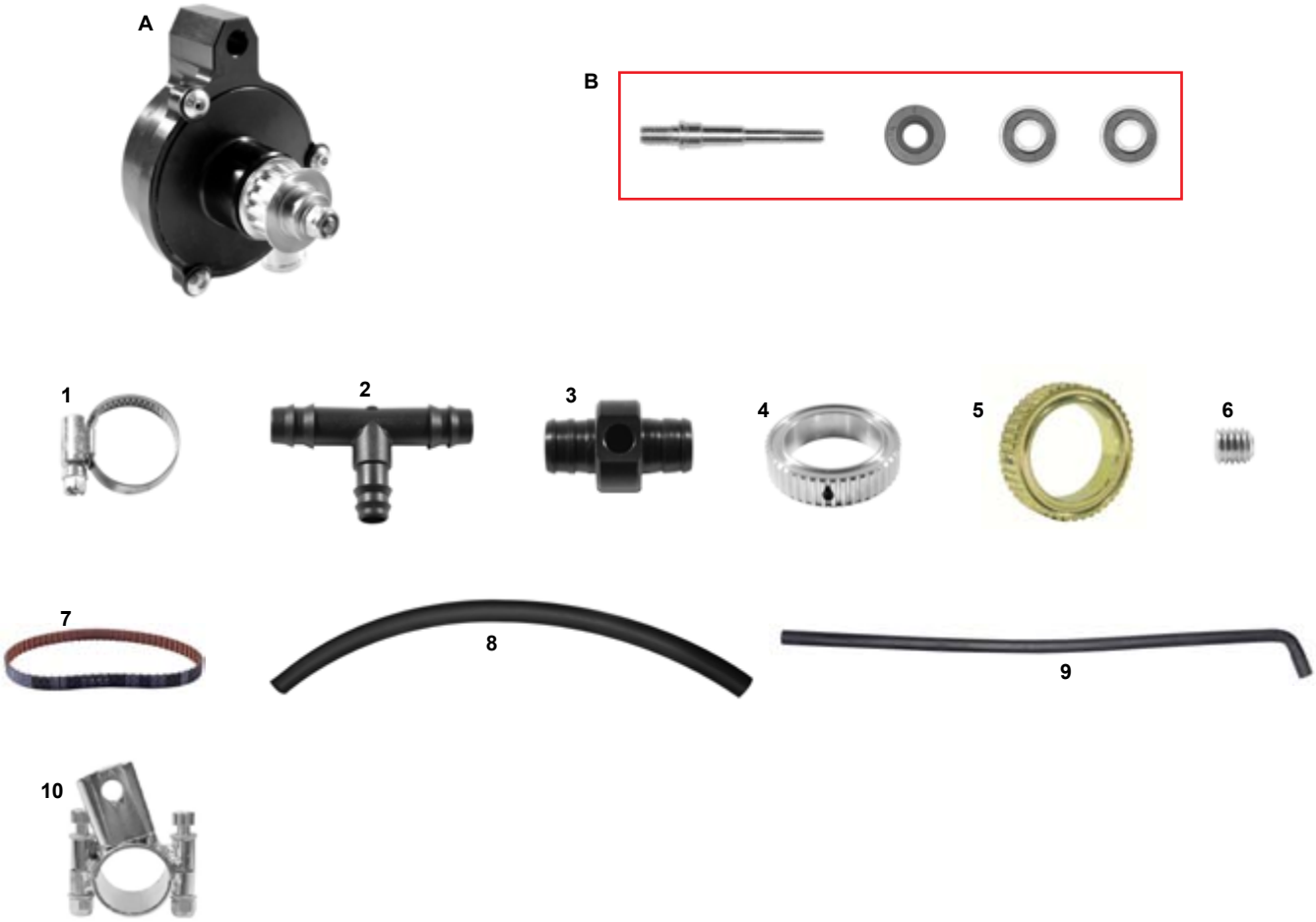

ES	COD.	DESCRIZIONE	ITEMS
A	FM0.00762	Pompa acqua completa	Water pump complete
B	CRG.01614	Kit revisione pompa acqua	Water pump revision kit
1	AFN.00776	Fascetta acciaio 16-25 radiatore	Water clip 16-25
2	AFS.00723	Raccordo T valvola termostatica	Thermic valve T fitting
3	FAN.01130	Raccordo sonda acqua	Water temp. sensor T. piece
4	FL1.01662	Puleggia 50 pompa acqua std	Water pump pulley std 50
5	FAG.01662	Puleggia 50 pompa acqua std oro	Water pump pulley std 50 gold
6	AFN.00289	Grano M 6x 6 cuscinetto	Grub screw M 6x 6 axle bearing
6	AFS.01672	Cinghia dentata 140 barra diritta	Water driving belt 140 straight bar
6	AFS.02769	Cinghia dentata 150 barra diritta	Water driving belt 150 straight bar
7	AFS.01640	Cinghia dentata 160 barra inclinata	Water driving belt 160 curved bar
8	AMS.00784	Tubo valvola termostato	Thermic valve pipe
9	AFS.00761	Tubo acqua curvo	Curved water pipe
10	FM0.03158	Supporto pompa acqua registrabile	Water pump register support assy
	AFS.00768	Ventola pompa acqua	Water pump fan
	SL1.00767	Puleggia pompa acqua piccola	Water pump pulley small

FILTRI - FILTERS

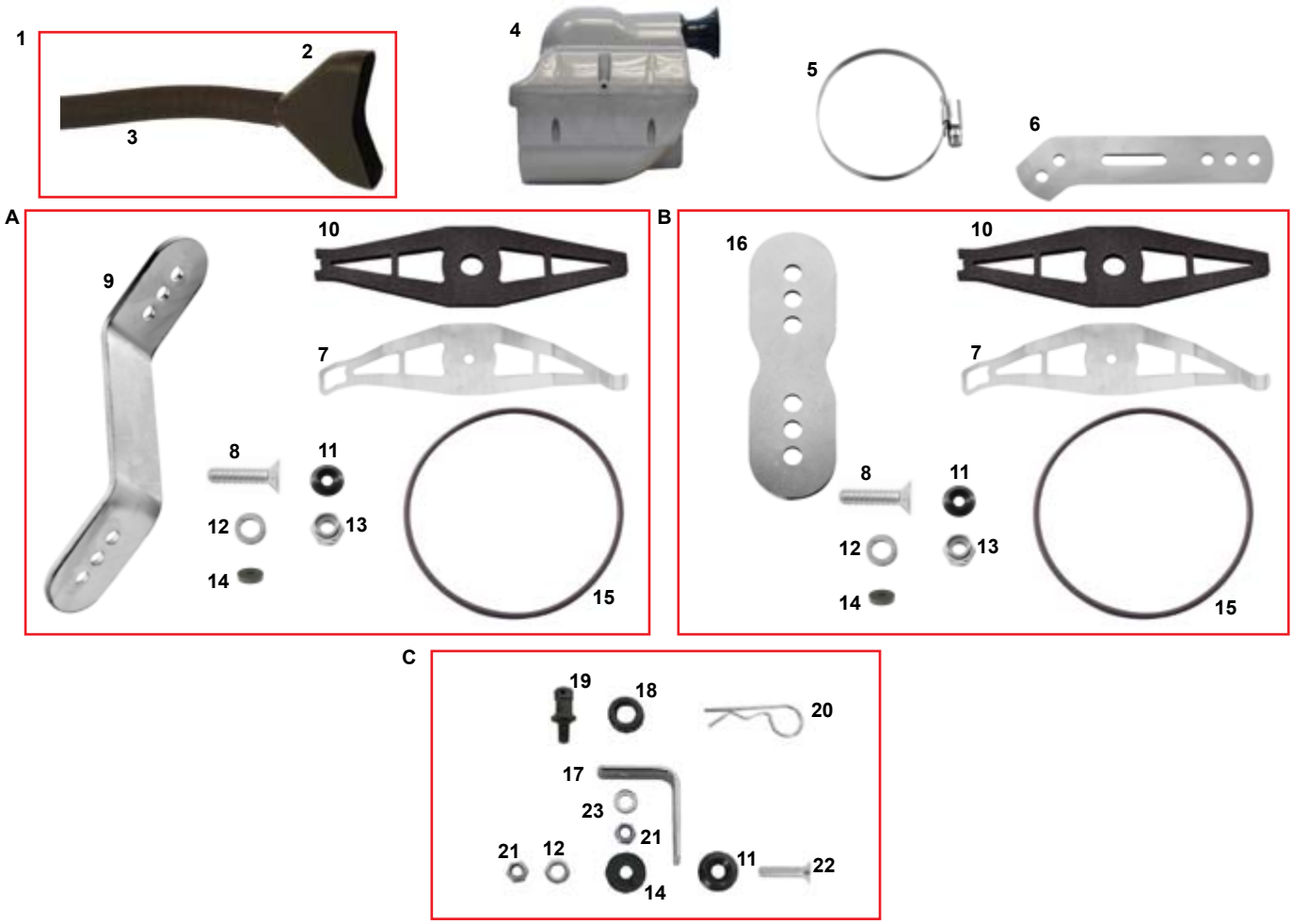

ES	COD.	DESCRIZIONE	ITEMS
1	FM0.00988	Convogliatore plastica completo	Brake cooling duct comp.
2	AFS.00988	Convogliatore plastica	Brake duct
3	AMS.00989	Tubo convogliatore freno	Brake cooling tube
4	AFS.03875	Filtro aria nitro 30 KZ 8/SA/24 argento	Air filter nitro 30 KZ 8/SA/24 silver
5	AFN.00955	Fascetta acciaio 50-70 filtro	Air filter clip 50-70
6	SC0.01962	Supporto filtro iame	Iame air filter support
7	AML.01933	Supporto filtro aria	Air filter support
8	AFN.00295	Vite M 6x 25 svasata	M 6x 25 countersunk head screw
A	FK0.01936	Kit supporto filtro DD	Filter support kit DD
B	FK0.01933	Kit supporto filtro KZ	Filter support kit KZ
9	AML.01936	Piastrina supporto filtro DD	DD filter support
10	AFS.01935	Spugna adesiva supporto filtro	Sticker sponge for filter
11	SAN.00249	Rondella 6 svasata nera	Washer M 6 countersunk black
12	AFN.00105	Rondella 6,5-12x1,5	Washer 6,5-12x1,5
13	AFN.00264	Dado M 6 autoblock alto	Nut M 6 high self-locking
14	AFS.00258	Gommino pianale	Floor tray rubber
15	AFN.00248	Cinghiolo pompa acqua 2000	Water pump driving belt 2000
16	SC0.01934	Piastrina supporto filtro KZ	KZ filter support
C	FK0.02317	Piastrina supporto filtro DD2 comp	Filter support DD2 assy
17	SZ0.02317	Piastrina supporto filtro DD2	Filter support DD2
18	AFS.00101	Gommino supporto frontalino	Front fairing rubber
19	SBN.00103	Perno supporto frontalino inferiore	Front fairing support pivot
20	SZ0.00102	Spina elastica supporto frontalino	Front fairing elastic pin
21	AFN.00106	Dado M 6 autoblock basso	Nut M 6 low self-locking
22	AFN.00261	Vite M 6x20 svasata	M 6x20 countersunk head screw

CORONE & CATENE - CHAINS & SPROCKETS

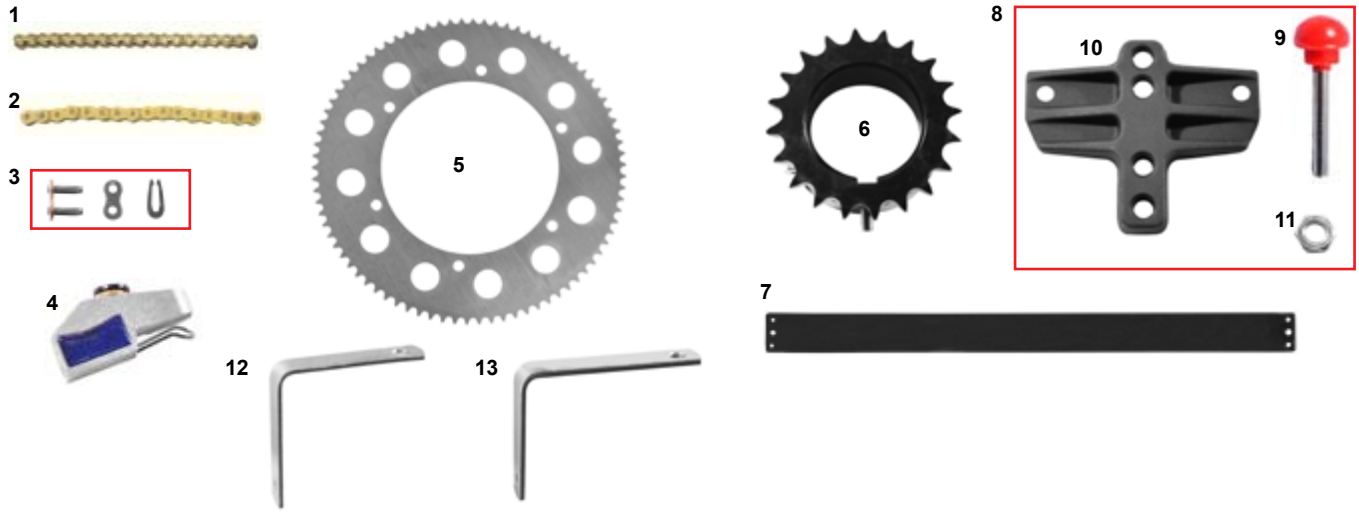

ES	COD.	DESCRIZIONE	ITEMS
1	AFS.00614**	Catena DD con or	Chain DD with o-ring
		**misure da 98 a 114	** sizes from 98 to 114
2	AMS.00671	Catena KZ al metro	KZ chain per meter
2	AMS.02651	Catena DD Puffo passo 219 (al mt)	DD chain Puffo 219 per meter
3	AMS.00779	Maglia congiunzione KZ	Joining link KZ
3	AMS.02652	Maglia congiunzione catena Puffo	Joining link Puffo 219
3	AFS.01121	Smagliacatena	Chain linker tool
4	AFS.01071	Cat (attr.catena 219-corona 4mm)	Alignment (tool for chain)
5	AFS.00171**	Corona DD	Sprocket DD
		**misure da 66 a 86	** sizes from 66 to 86
5	AFS.00506	Corona Puffo	Sprocket Puffo
6	AFS.00797**	Corona KZ D50 ergal	Sprocket KZ D50
		**misure da 20 a 30	** sizes from 20 to 30
7	AFS.00338	Paracatena dritto KZ	Straight chain guard
8	FMN.00298	Tendicatena forgiato nero comp.	Chain tightener forged black comp.
9	AFS.00254	Vite tendicatena M10 (pom.rosso)	Chain tigh. screw M10 (red pom.)
10	SAN.00298	Tendicatena forgiato nero	Forged chain tightener black
11	AFN.00255	Dado M10	Nut M10
12	**FZ0.03742**	Supporto paracatena KZ 2016	Chain guard support KZ 2016
13	FZ0.00450	Sup. paracatena DD mini corto	Chain guard support DD mini short

KIT RIPARA DISCO - DISC PROTECTION KIT

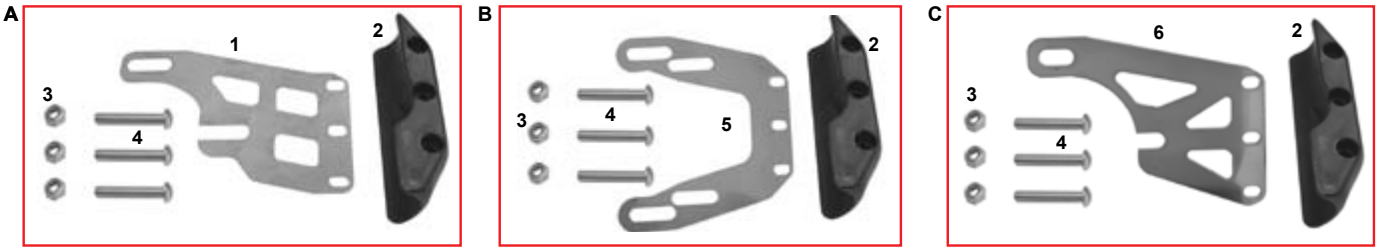

ES	COD.	DESCRIZIONE	ITEMS
A	FK0.01632	Kit ripara disco CRG CIK	Rear brake disc guard kit CRG
B	FK0.02872	Kit ripara disco	Rear brake disc guard kit
C	FK0.03437	Kit ripara disco 2016	Rear brake disc guard kit
1	AML.01629	Supporto salvadisco CRG	Disc protection support CRG
2	AFS.01632	Salva disco plastica CRG	Disc protection
3	AFN.00106	Dado M 6 autoblock basso	Nut M 6 low self-locking
4	AFN.01984	Vite M 6x 35 bombata	M 6x 35 convex head screw
5	AML.02872	Supporto salvadisco +5 +10	Disc protection support +5 +10
6	AML.03437	Supporto salvadisco CRG pastr. ass 2016	Disc protection support 2016

KIT PARACATENA - CHAIN PROTECTION KIT

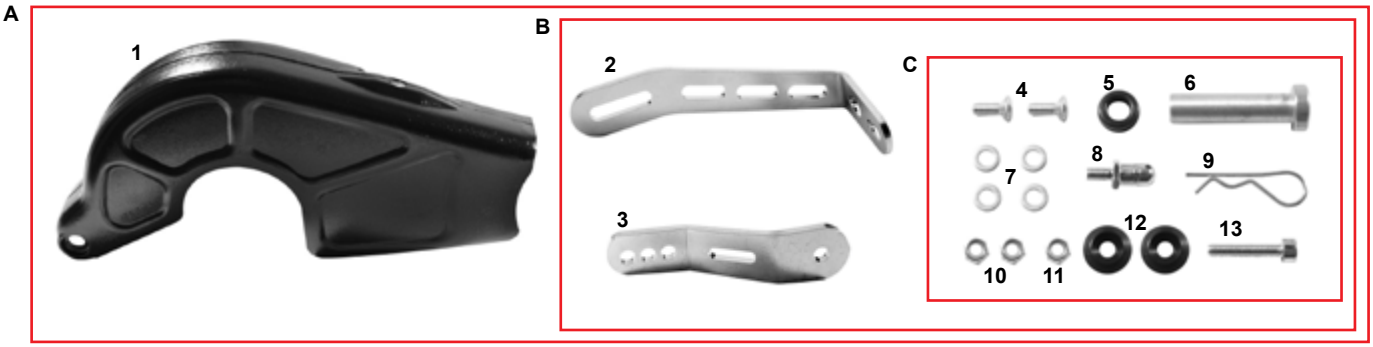

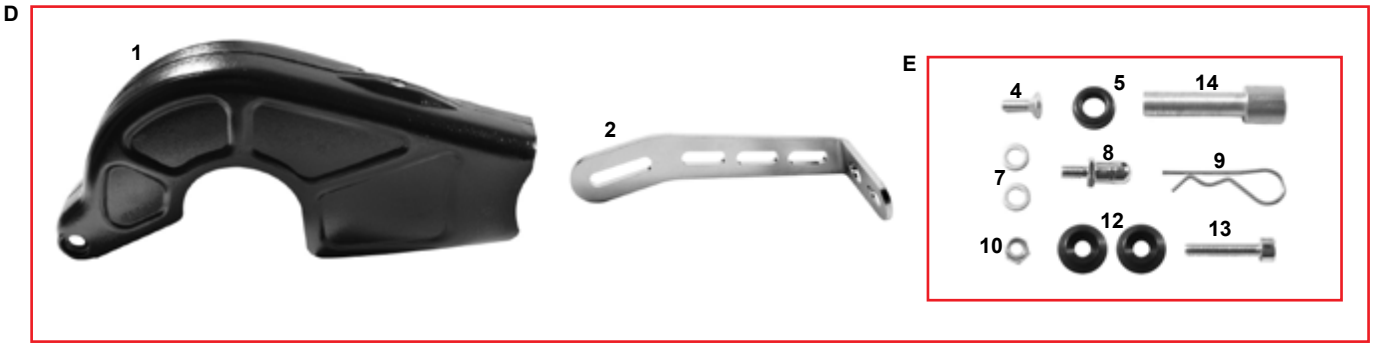

ES	COD.	DESCRIZIONE	ITEMS
A	FK0.01926	Kit carter paracatena	Chain guard kit complete
1	AFS.01926	Carter paracatena	Chain guard
B	FK0.01928	Kit attacchi carter paracatena	Chain guard supp. kit
2	SC0.01928	Supporto paracatena CRG	Chain guard CRG support
3	SC0.01927	Piastrina attacco paracatena	Chain guard connect.support bottom
C	FK0.01927	Kit viti attacco paracatena CRG	Screw kit chain guard CRG
4	AFN.00295	Vite M 6x 25 svasata	M 6x 25 countersunk head screw
5	AFS.00101	Gommino supporto frontalino	Front fairing rubber
6	SL1.01965	Perno paracatena	Chainguard pivot
7	AFN.00105	Rondella 6,5-12x1,5	Washer 6,5-12x1,5
8	SBN.00103	Perno supporto frontalino inferiore	Front fairing support pivot
9	SZ0.00102	Spina elastica supporto frontalino	Front fairing elastic pin
10	AFN.00106	Dado M 6 autoblock basso	Nut M 6 low self-locking
11	AFN.00264	Dado M 6 autoblock alto	Nut M 6 high self-locking
12	SAN.00249	Rondella 6 svasata nera	Washer 6 countersunk black
13	AFN.00368	Vite M 6x 40 cilindrica	M 6x 40 socket head screw
D	FK0.02441	Kit carter paracatena mini	Chain guard kit complete mini
E	PMV.02799	Kit viti attacco paracatena mini	Screw kit chain guard mini
14	SL1.02799	Perno paracatena mini	Chain guard mini pivot

SISTEMI DI TELEMETRIA STARLANE - STARLANE TELEMETRY SYSTEM

ES	COD.	DESCRIZIONE	ITEMS
	AFS.03745	Corsaro K + WID - AK - EGT	Corsaro K + WID - AK - EGT
1	AFS.03746	Corsaro	Corsaro
2	AFS.03747	Corsaro Pro	Corsaro Pro
	AFS.03748	WID-AK EGT-H2o-Int. battery-RPM	WID-AK EGT-H2o-Int. battery-RPM
	AFS.03749	WID-AXS EGT-H2o-RPM	WID-AXS EGT-H2o-RPM
3	AFS.03750	WID-APRO EGT-H2o-Speed-Int. battery-RPM	WID-APRO EGT-H2o-Speed-Int. battery-RPM
4	AFS.03751	WID-C	WID-C
5	AFS.03766	Batteria Li-Ion11,1V2,2Ah	Li-Ion11 battery, 1V2, 2AH
6	AFS.03767	Carica batterie Li-Ion multivoltage	Li-Ion multivoltage battery charger
7	AFS.03765	Batteria Li-Ion7,4V2,2Ah	Li-Ion7 battery, 4V2, 2AH
8	AFS.03760	Manicotto per sensore acqua M10X1	Support for wheel sensor M10X1
9	AFS.04022	Cavo alim. Corsaro conn. M8	Power cable Corsaro conn. M8
10	AFS.03757	Prolunga maschio-femmina 50cm.	Cable extension M-F 50 cm
11	AFS.03758	Prolunga maschio-femmina 100cm.	Cable extension M-F 100 cm
12	AFS.03759	Prolunga maschio-femmina 150cm.	Cable extension M-F 150 cm
13	AFS.03755	Staffa sensore	Support for speed sensor
14	AFS.03764	Sensore rotativo	Rotating sensor
15	AFS.03761	Sensore temperatura liquido M10X1	Liquid temperature sensor M10X1
16	AFS.03762	Termocoppia tipo K filetto M12	Thermocouple “K” M12
17	AFS.03763	Sensore sotto candela	Spark sensor
	AFS.03770	Ionic NRG-K	Ionic NRG-K
	AFS.03752	Sensore velocità magnetico	Magnetic speed sensor
	AFS.03753	Ruota fonica posteriore 50mm.Diam.	Rear phonic wheel 50mm Diam.
	AFS.03754	Ruota fonica anteriore	Front phonic wheel
	AFS.03756	Magnete 6X2mm. per sensore velocità	Magnet for speed sensor
	AFS.03768	Sensore infrarosso temp. pneumatico	Infrared tire temp. sensor
18	AFS.03769	Sensore pressione freno 60BAR	Brake pressure sensor 60 bar
19	AML.03788	Supporto Starlane per sedile	Starlane seat support
	AFS.04073	Supporto Starlane per volante	Starlane steering wheel support

1

2

3

4

5

6

7
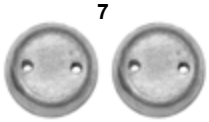

8

9

10

ES	COD.	DESCRIZIONE	ITEMS
1	AFS.00969	Rotolo nastro adesivo CRG H.50	CRG adhesive tape H.50
2	AFS.01094	Carrello verticale espositore	Vertical stand with wheels
3	AFS.01950	Carrello CRG con ruote	CRG trolley with wheels
4	AFS.01131	Attrezzo spurgo	Brake bleeding tool
5	AFS.00928	Kit adesivi protezione trasparente	Sticker kit for protection
6	AFS.01126	Smontagomme	Tyre bead breaker
7	AM5.01133	Piombo al kg	Lead to balance wheels
	AFS.01720	Piombo bilanciatura	Plomb
8	AFS.03992	Copri cilindro protezione invernale	Winter cylinder cover
9	AFS.01894	Tappeto expo CRG nero 200x140cm	Expo CRG carpet 200x140cm
10	AFS.01027	Banner CRG orizzontale	Horizzontal CRG banner

ES	COD.	DESCRIZIONE	ITEMS
1	AFS.01386	Misurino olio	Oil measure
2	AFS.02002	Xeramic olio freni ml.250	Xeramic brake fluid ml.250
3	AFS.01977	Xeramic olio evolution castor	Xeramic evolution castor oil
4	AFS.02221	Xeramic olio synmax full synthetic	Xeramic synmax full synthetic oil
5	AFS.01009	Xeramic pulitore freni	Xeramic brake cleaner
6	AFS.01855	Xeramic istant gasket	Xeramic istant gasket
7	AFS.00990	Xeramic spray carburatore	Xeramic ait intake carb & choke cleaner
8	AFS.03185	Pompa benzina alluminio P/100 KZ	Fuel pump alu P/100 KZ
9	AFS.01843	Sniper V2	Sniper V2
10	AFS.01975	Sniper V4	Sniper V4
	BATT.0001	Batteria 2L176 1 pila	Battery 2L176 1 piece
	BATT.0002	Batteria 9V 1 pila	Battery 9V 1 piece
	BATT.0003	Batteria LR44 1 pila	Battery LR44 1 piece
	BATT.0004	Batteria stilo AA 4 pile	Battery stilo AA 4 piece
	BATT.0005	Batteria ministilo AAA 4 pile	Battery ministilo AAA 4 piece

ARTICOLI XL - XL ITEMS

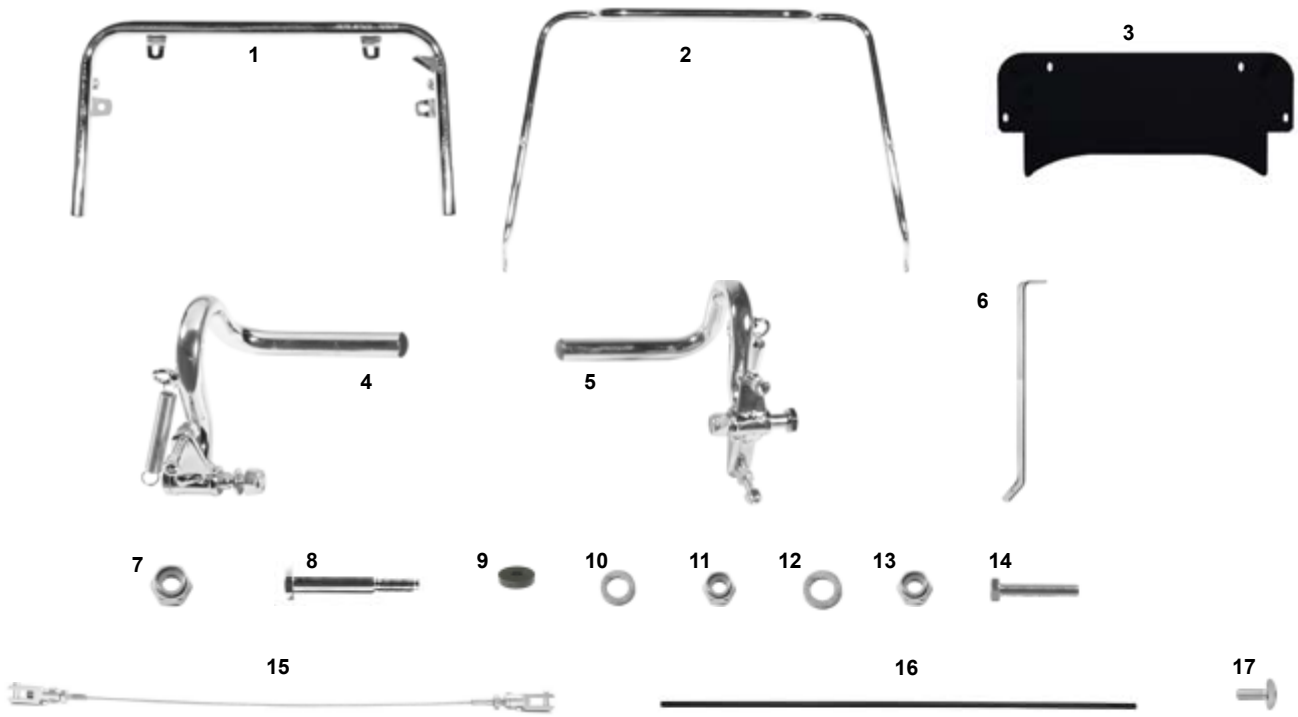

ES	COD.	DESCRIZIONE	ITEMS
1	SC0.01134	Paraurti anteriore inferiore XL	Front bumper bar below XL
2	SC0.01652	Paraurti anteriore superiore XL	Front bumper bar top XL
3	FAN.02256	Pianale estensione	Extension floor tray
4	SC0.00868	Pedale gas arretrato con tappo	Gas pedal back position with cap
5	SC0.00869	Pedale freno arretrato con tappo	Foot brake pedal back pos. with cap
6	SC0.01548	Supporto frontalino inferiore XL	Front fairing support below XL
7	AFN.00093	Dado M 6	Nut M 6
8	SBN.00271	Perno pedale lungo	Pedal pivot long
9	AFS.00258	Gommino pianale	Floor tray rubber
10	AFN.00263	Rondella 6,5-18x1,6	Washer 6,5-18x1,6
11	AFN.00106	Dado M 6 autoblock basso	Nut M 6 low self-locking
12	AFN.00129	Rondella 8,5-17x1,5	Washer 8,5-17x1,5
13	AFN.00160	Dado M 8 autoblock basso	Nut M 8 low self-locking
14	AFN.00283	Vite M 6x 35 esagonale	M 6x 35 hexagonal head screw
15	AFS.00811	Cavo sicurezza cm.52	Safety cable cm.52
16	SBN.01358	Asta freno zincata 52 cm	Brake rod 52 cm
17	AFS.00261	Vite testa tonda pianale M 6x 16	Foor tray screw M 6x16

ARTICOLI PUFFO - PUFFO ITEMS

COD.	DESCRIZIONE	ITEMS
FC0.01315	Assale 45 Puffo	Axle 45 Puffo
FL1.00053	Assale 35 Puffo	Axle 35 Puffo
SL1.02469	Boccola interna D21>D25 carena	Int.bushing D21>D25 fairing
SZ0.01937	Bussola rullino tendicatena Puffo	Chaintender roller bushing Puffo
AFS.02425	Campana frizione honda GX35 Puffo	Honda GX35 clutch drum
AFS.00524	Carburatore Dell'orto Puffo	Dell'orto Puffo carburettor
AFS.00757	Carena laterale new age mini/Puffo	Newage side fairing mini/Puffo
AMS.02651	Catena 100-Puffo 219 (al mt)	Chain 100-Puffo 219 (per meter)
FL1.00236	Cavalotto motore Puffo	Engine mount clamp Puffo

COD.	DESCRIZIONE	ITEMS
AFS.01019	Chiavetta 8x5x50mm Puffo	Key way 8x5x50mm Puffo
AFS.00506	Corona Puffo	Sprocket Puffo
AFN.02206	Cuscinetto 6201 12x32x10	Honda GX35 bearing 6201 12x32x10
SL1.00490	Disco freno Puffo	Brake disc Puffo
AFS.00759	Frontalino new age mini/Puffo	Newage front fairing mini/Puffo
AFN.00498	Grano M8x35 pinza Puffo	Grub screw M8x35 Puffo brake caliper
FK0.00270	Pedale completo Puffo freno	Puffo brake pedal complete
FK0.00268	Pedale completo Puffo gas	Puffo gas pedal complete
FK0.0211825	Kit sup.carena post. KG con viti	Rear bumper compl. kit KG
FKN.02469	Kit vite car.post.plast. D21>D25	Rear bumper kit D21>D25 comp.
AMS.02652	Maglia cong. catena Puffo 219	Joining link chain Puffo 219
FZ0.00517	Molla pinza freno Puffo	Puffo brake spring
CRG.00569	Mozzo corona 25 Puffo	Sprocket carrier Puffo 25 black comp.
FMN.00569	Mozzo corona 25 Puffo nero comp.	Sprocket carrier Puffo 25 black comp.
CRG.00585	Mozzo disco post. all. 25 Puffo	Alu.rear brake disc hub 25 Puffo
FMN.00585	Mozzo disco post. 25 Puffo comp.	Rear brake disc hub 25 Puffo comp.
AFS.00436	Paracapelli Puffo plastica	Plastic carter Puffo
FV0.00411	Carter paracatena Puffo	Chain guard Puffo
SC0.00282	Paraurti anteriore Puffo	Front bumper Puffo
AFS.00438	Pastiglia freno Puffo	Brake Pad Puffo
SC0.00270	Pedale freno Puffo con tappo	Brake pedal Puffo with cap
SC0.00268	Pedale gas Puffo con tappo	Gas pedal Puffo with cap
FVN.01783	Pedaliera Puffo	Foot pedal support Puffo
FBN.01086	Perno pinza Puffo	Caliper pivot Puffo
FV0.00054	Pianale Puffo	Floor tray Puffo
FC0.00060	Piantone sterzo Puffo	Steering column Puffo
SZ0.02631	Piastra interruttore Puffo	Puffo push switch support
FL1.00211	Piastra motore Puffo	Engine mount Puffo
FL1.02521	Piastra motore all. baby USA	Baby USA engine mount alu.
FAN.00211	Piastra motore all.nera Puffo	Puffo engine mount alu. black
SZ0.02191	Piastrina tendicatena honda GX35	Chain tightener plate honda GX35
AFS.02234	Pignone Z8 Puffo honda GX35	Axle pinion honda GX35 Z8
FM0.00458	Pinza freno Puffo completa	Rear brake caliper Puffo complete
SL1.00454	Pistoncino pinza Puffo	Piston Puffo caliper
AFS.02278	Pulsante massa Puffo	Puffo switch on/off
FL1.00509	Rullino tendicatena Puffo	Tightener roller Puffo
FV0.00048	Scocca Puffo Honda	Puffo frame Honda
AFS.00166EV00	Sedile resina CRG 23-23,5 Puffo	Resin seat CRG 23-23,5 Puffo
AFN.02205	Seeger D12 est.frizione honda GX35	Est. seeger D12 honda GX35 clutch
AFN.00973	Seeger D32 int.frizione honda GX35	Int.seeger D32 honda GX35 clutch
SL1.0538D	Semi pinza Puffo destra	Half caliper Puffo right
SL1.0538S	Semi pinza Puffo sinistra	Half caliper Puffo left
SL1.02406	Spessore 5-12x19 motore Puffo	Spacer for Puffo engine 5-12x19
SL1.02405	Spessore 5-16x27 motore Puffo	Spacer for Puffo engine 5-16x27
SL1.02407	Spessore 6-16x20 tend. Puffo	Spacer for Puffo chain 6-16x20
AFS.00758	Spoiler new age mini/Puffo	New age spoiler mini/Puffo
SBN.00467	Svitone pinza Puffo	Puffo brake caliper unscrew
FBN.01197	Vite fusello Puffo nera	Stub axle bolt Puffo black
AFS.00537	Volante Puffo	Steering wheel Puffo
FAN.01471	Piastra motore all. Puffo comer nera	Comer engine mount Puffo
FVN.00084	Scocca Puffo Comer	Puffo frame Comer
FL1.00236	Cavallotto all. Puffo N38E	Engine clamp Puffo

M KIT PRONTO GARA MINI - READY TO RACE KIT MINI

A

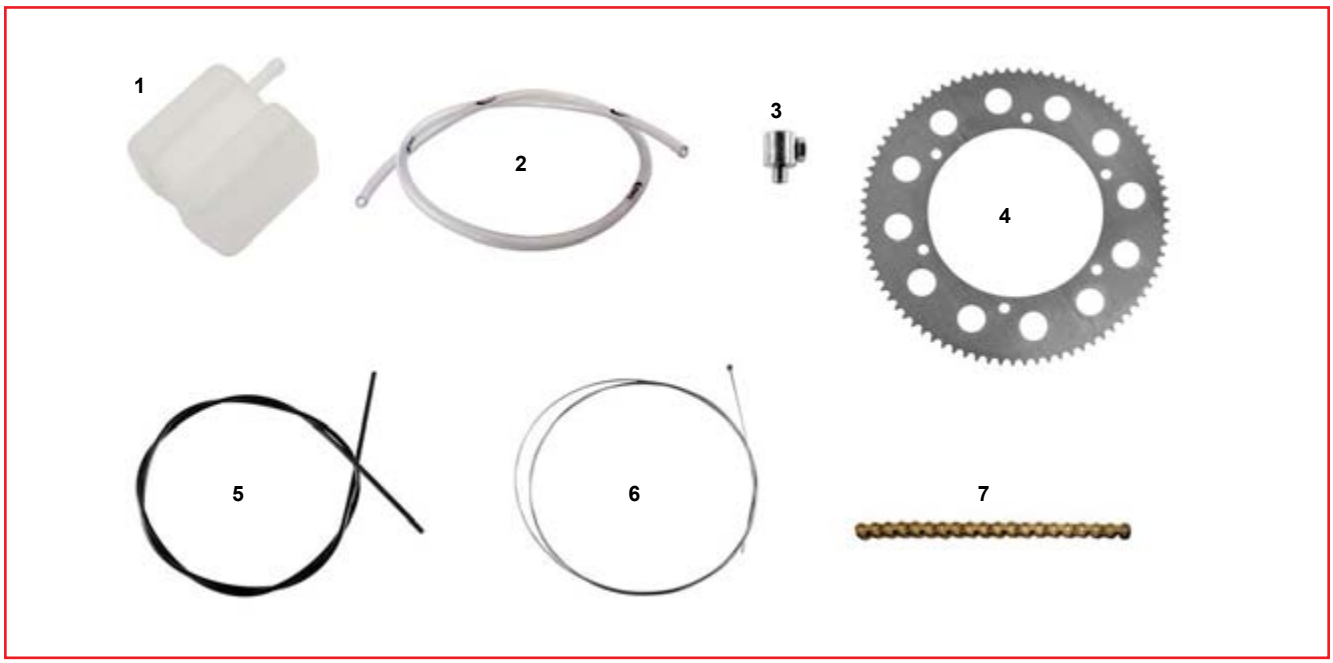

ES	COD.	DESCRIZIONE	ITEMS
A	CRG.50005	Prontogara mini-baby	Ready to race mini

ES	COD.	DESCRIZIONE	ITEMS	Q.TÀ
1	AFS.00753	Tanica recupero	Recovery tank	1
2	AMS.00139	Tubo benzina al metro	Fuel pipe	2
3	AFS.00514	Morsetto filo	Cable clamp	1
4	AFS.0017182	Corona DD 219 Z82	Sprocket DD 219 Z82	1
5	AMS.01370	Guaina filo D5 gas std	Outer cable D5 for gas cable	1,5
6	AFS.00515	Filo gas	Gas cable	1
7	AFS.00614108	Catena 108M DD con or	Chain 219 o-ring 108	1

DD KIT PRONTO GARA - READY TO RACE KIT

A

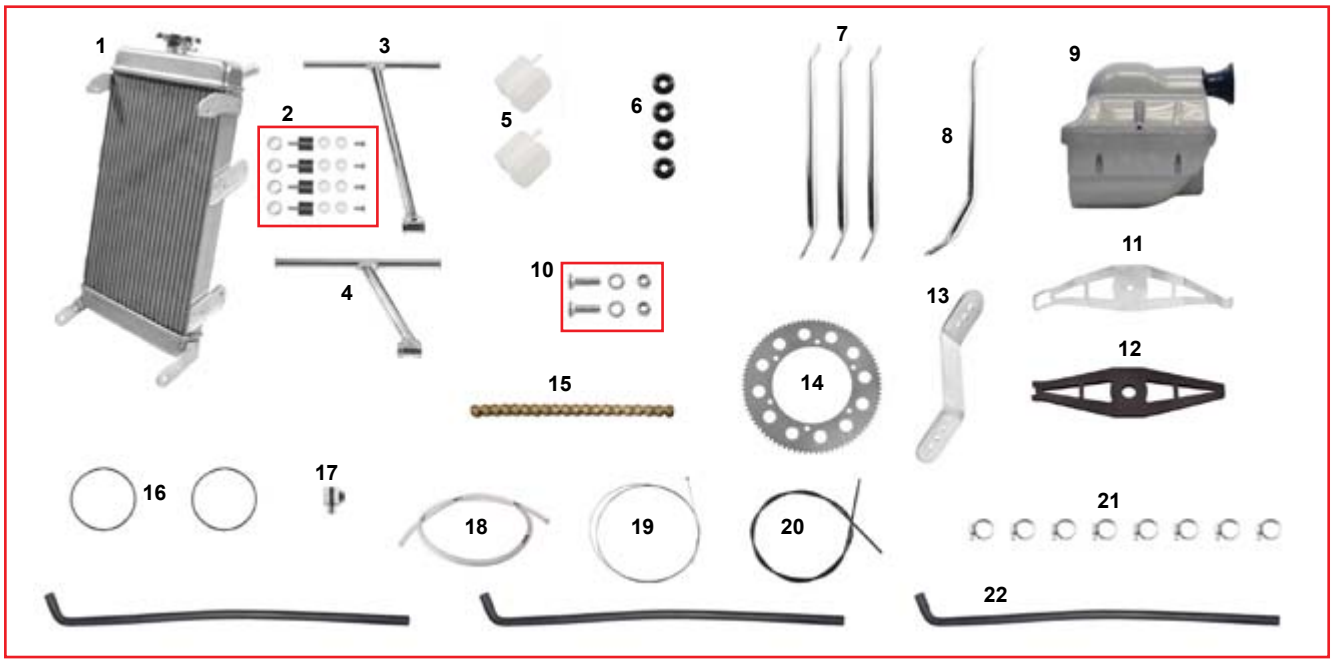

ES	COD.	DESCRIZIONE	ITEMS
A	CRG.50001	Prontogara DD1-DD2-DD3-DD4	DD1-DD2-DD3-DD4 ready to race

ES	COD.	DESCRIZIONE	ITEMS	Q.TÀ
1	AFS.00785	Radiatore con tappo	Radiator with cap	1
2	FK0.00760	Kit silentblock radiatore	Radiator Rubber mounting kit	1
3	SC0.02597	Supporto radiatore tag corto DD	Tag radiator support short	1
4	SC0.00788	Supporto radiatore corto	Short radiator support	1
5	AFS.00753	Tanica recupero	Recovery tank	2
6	FAN.00260	Rondella 8 sedile all. nera	Alu seat washer black 8	4
7	FC0.01392	Rinforzo sedile 30 diritto	Straight seat support 30	3
8	FC0.01389	Rinforzo sedile 32 curvo	Curved seat support 32	1
9	AFS.03875	Filtro aria nitro 30 KZ 8/SA/24 argento	Air filter nitro 30 KZ 8/SA/24 silver	1
10	PMV.FILTRO	Kit viti montaggio filtro aria	Screw mounting kit air filter	1
11	AML.01933	Supporto filtro aria	Air filter support	1
12	AFS.01935	Spugna adesiva supporto filtro	Sticker sponge for filter	1
13	AML.01936	Piastrina supporto filtro DD	DD filter support	1
14	AFS.0017178	Corona DD 219 Z78	Sprocket DD 219 Z78	1
15	AFS.00614108	Catena 108M DD con or	Chain 108M DD o-ring	1
16	AFN.00248	Cinghiolo pompa acqua 2000	Water pump driving belt 2000	2
17	AFS.00514	Morsetto filo	Cable clamp	1
18	AMS.00139	Tubo benzina al metro	Fuel pipe	1,5
19	AFS.00515	Filo gas	Gas cable	1
20	AMS.01370	Guaina filo D5 gas standard	Outer cable D5 for gas cable	0,7
21	AFN.00776	Fascetta acciaio 16-25 radiatore	Radiator steel band16-25	8
22	AFS.00761	Tubo acqua curvo	Curved water pipe	3

KZ KIT PRONTO GARA - READY TO RACE KIT

A

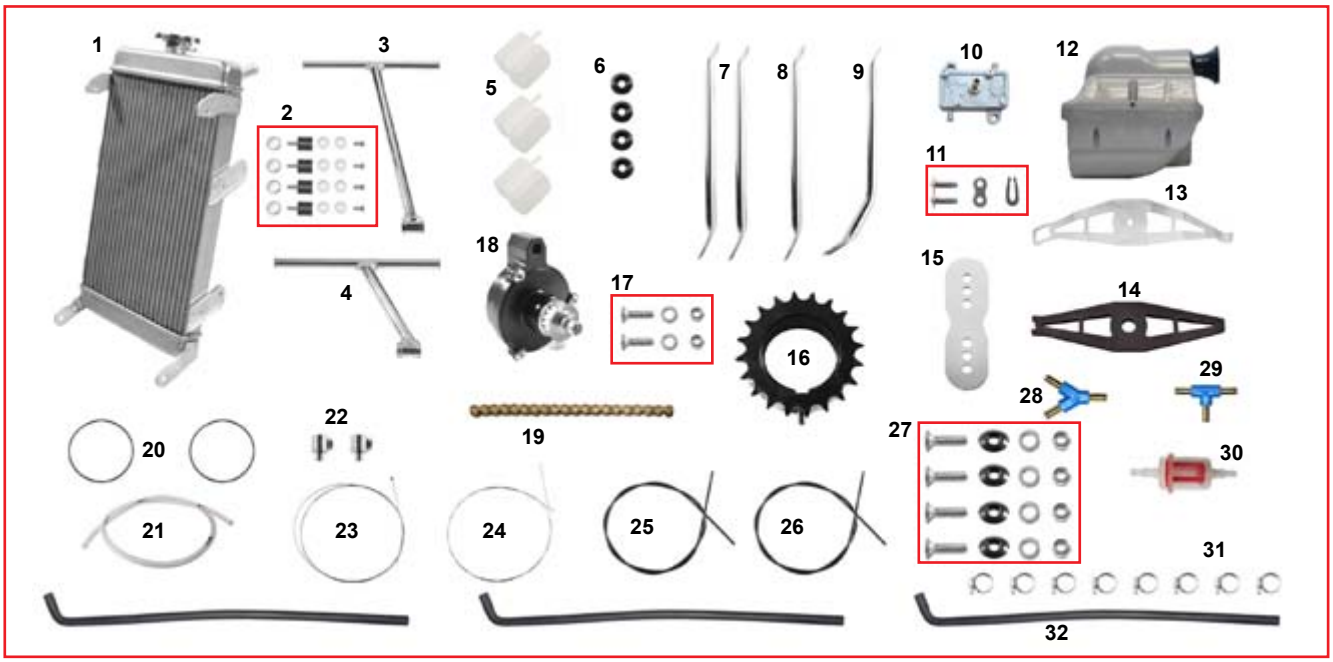

ES	COD.	DESCRIZIONE	ITEMS
A	CRG.50002	Prontogara KZ2	KZ2 ready to race

ES	COD.	DESCRIZIONE	ITEMS	Q.TÀ
1	AFS.00785	Radiatore con tappo	Radiator with cap	1
2	FK0.00760	Kit silentblock radiatore	Radiator Rubber mounting kit	1
3	SC0.00789	Supporto radiatore tag lungo DD	Tag radiator support long	1
4	SC0.00788	Supporto radiatore corto	Short radiator support	1
5	AFS.00753	Tanica recupero	Recovery tank	3
6	FAN.00260	Rondella 8 sedile all. nera	Alu seat washer black 8	4
7	FC0.01391	Rinforzo sedile 28 diritto	Straight seat support 28	2
8	FC0.01028	Rinforzo sedile 28 sotto marmitta KZ	Curved seat support 28 KZ x exhaust	1
9	FC0.01392	Rinforzo sedile 30 diritto	Straight seat support 30	1
10	AFS.03185	Pompa benzina alluminio P/100 KZ	Fuel pump alu P/100 KZ	1
11	AMS.00779	Maglia congiunzione catena KZ	Junktion link for chain KZ	1
12	AFS.03875	Filtro aria nitro 30 KZ 8/SA/24 argento	Air filter nitro 30 KZ 8/SA/24 silver	1
13	AML.01933	Supporto filtro aria	Air filter support	1
14	AFS.01935	Spugna adesiva supporto filtro	Sticker sponge for filter	1
15	SC0.01934	Piastrina supporto filtro KZ cromata	KZ filter support	1
16	AFS.00797Z25	Corona KZ 50 ergal Z25	Sprocket KZ D50 T23	1
17	PMV.FILTRO	Kit viti montaggio filtro aria	Screw mounting kit air filter	1
18	FM0.00762	Pompa acqua nera completa	Water pump complete black	1
19	AMS.00671	Catena al metro KZ standard	Chain KZ per meter	1
20	AFN.00248	Cinghiolo pompa acqua 2000	Water pump driving belt 2000	2
21	AMS.00139	Tubo benzina al metro	Fuel pipe	3
22	AFS.00514	Morsetto filo	Cable clamp	2
23	AFS.00515	Filo gas	Gas cable	1
24	AFS.01364	Filo frizione	Clutch cable	1
25	AMS.00516	Guaina filo D6 frizione	Outer cable D6 for clutch	2
26	AMS.01370	Guaina filo D5 gas standard	Outer cable D5 for gas cable	1,5
27	FK0.01392	Kit vite rinforzo sedile	Reinforce seat screw assy kit	4
28	AFS.01981	Raccordo Y festo	Y-fitting festo	1
29	AFS.01982	Raccordo T festo	T-fitting festo	1
30	AFS.01016	Filtro benzina	Fuel filter	1
31	AFN.00776	Fascetta acciao 16-25 radiator	Radiator steel band 16-25	8
32	AFS.00761	Tubo acqua curvo	Curved water pipe	3

KZ KIT PRONTO GARA - READY TO RACE KIT

A

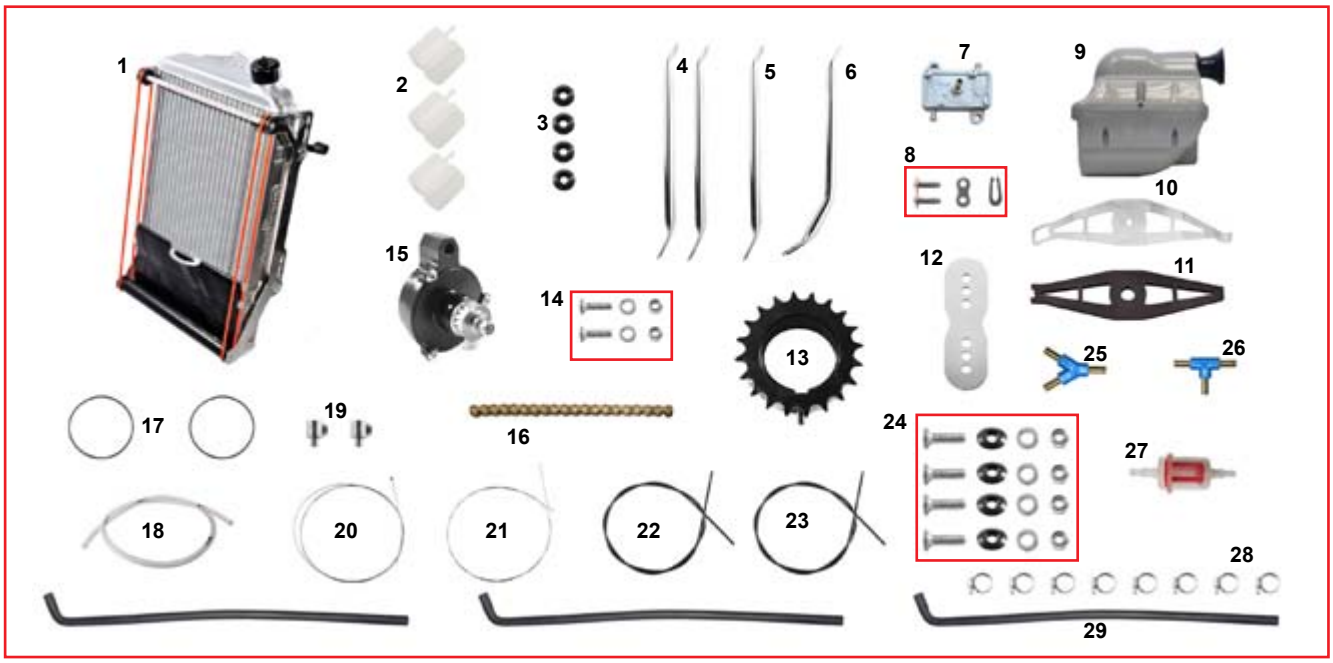

ES	COD.	DESCRIZIONE	ITEMS
A	CRG.50006	Prontogara KZ2 radiatore newline	KZ2 ready to race kit newline radiator

ES	COD.	DESCRIZIONE	ITEMS	Q.TÀ
1	FM0.02463	Radiatore racing completo	Racing radiator complete ATOR	1
2	AFS.00753	Tanica recupero	Recovery tank	3
3	FAN.00260	Rondella 8 sedile all. nera	Alu seat washer black 8	4
4	FC0.01391	Rinforzo sedile 28 diritto	Straight seat support 28	2
5	FC0.01028	Rinforzo sedile 28 sotto marmitta KZ	Curved seat support 28 KZ x exhaust	1
6	FC0.01392	Rinforzo sedile 30 diritto	Straight seat support 30	1
7	AFS.03185	Pompa benzina alluminio P/100 KZ	Fuel pumo alu P/100 KZ	1
8	AMS.00779	Maglia congiunzione catena KZ	Joining link for chain KZ	1
9	AFS.03875	Filtro aria nitro 30 KZ 8/SA/24 argento	Air filter nitro 30 KZ 8/SA/24 silver	1
10	AML.01933	Supporto filtro aria	Air filter support	1
11	AFS.01935	Spugna adesiva supporto filtro	Sticker sponge for filter	1
12	SC0.01934	Piastrina supporto filtro KZ cromata	KZ filter support	1
13	AFS.00797Z25	Corona KZ 50 ergal Z25	Sprocket KZ D50 T25	1
14	PMV.FILTRO	Kit viti montaggio filtro aria	Screw mounting kit air filter	1
15	FM0.00762	Pompa acqua nera completa	Water pump complete black	1
16	AMS.00671	Catena al metro KZ standard	Chain KZ per meter	1
17	AFN.00248	Cinghiolo pompa acqua 2000	Water pump driving belt 2000	2
18	AMS.00139	Tubo benzina al metro	Fuel pipe per meter	3
19	AFS.00514	Morsetto filo	Cable clamp	2
20	AFS.00515	Filo gas	Gas cable	1
21	AFS.01364	Filo frizione	Clutch cable	1
22	AMS.00516	Guaina filo D6 frizione	Outer cable D6 for clutch	2
23	AMS.01370	Guaina filo D5 gas standard	Outer cable D5 for gas cable	1,5
24	FK0.01392	Kit vite rinforzo sedile	Reinforce seat screw assy kit	4
25	AFS.01981	Raccordo Y festo	Y-fitting festo	1
26	AFS.01982	Raccordo T festo	T-fitting festo	1
27	AFS.01016	Filtro benzina	Fuel filter	1
28	AFN.00776	Fascetta acciao 16-25 radiator	Radiator steel band 16-25	8
29	AFS.00761	Tubo acqua curvo	Curved water pipe	3

ABBIGLIAMENTO - CLOTHING LINE

1

2

3

4

5

ES	COD.	DESCRIZIONE	ITEMS
1	AAC.30094*	T-Shirt CRG 2016	T-Shirt CRG 2016
	AAC.30095 M	T-Shirt CRG 2016 7/8 anni	T-Shirt CRG 2016 7/8 age
	AAC.30095 L	T-Shirt CRG 2016 9/10 anni	T-Shirt CRG 2016 9/10 age
	AAC.30095 XL	T-Shirt CRG 2016 11/12 anni	T-Shirt CRG 2016 11/12 age
2	AAC.30121*	Camicia manica lunga	Shirt long sleeve
3	AAC.30128*	Camicia manica corta	Shirt short sleeve
4	AAC.30403**	Polo manica corta Lico	Polo shirt short sleeve Lico
5	AAC.30090*	T-Shirt CRG 30°anniversario bianca	T-Shirt CRG white 30° anniversary

*Taglie/Size da/from XS a/to XXXL
**Taglie/Size da/from XS a/to XXL

1

2

3

4

ES	COD.	DESCRIZIONE	ITEMS
1	AAC.30017*	Felpa cappuccio	Sweat shirt with hood
2	AAC.30407**	Felpa con zip summer	Sweat shirt summer with zip
	AAC.30096**	Felpa con zip winter	Sweat shirt winter with zip
3	AAC.30118*	Pile	Pile
4	AAC.30160*	Felpa CRG 30° anniversario	CRG sweat shirt 30° anniversary

* Taglie/Size da/from XS a/to XXXL
** Taglie/Size da/from XXS a/to XXXL

ABBIGLIAMENTO - CLOTHING LINE

1

2

3

4

5

6

ES	COD.	DESCRIZIONE	ITEMS
1	AAC.30167*	Pantalone nero	Trousers black
2	AAC.30001**	Bermuda nero	Bermuda black
3	AAC.30405***	Bomber	Bomber
4	AAC.30404*****	Soft shell	Soft shell
5	AAC.30406***	Gilet	Body warmer
6	AAC.30030****	K-way nero	K-way black

* Taglie/Size da/from 38 a/to 58
** Taglie/Size da/from 40 a/to 58
*** Taglie/Size da/from XS a/to XXL
**** Taglie/Size da/from S a/to XL
***** Taglie/Size da/from XXS a/to XXXL

1

2

3

4

5

6

7

ES	COD.	DESCRIZIONE	ITEMS
1	AEC.30067	Zaino	Bag
2	AAC.30163	Cappellino CRG Snapback	CRG Snapback
3	AAC.30105	Fascia CRG pile coulisse	Headband cap pile coulisse
4	AAC.30053	Sciarpa	Scarf
5	AAC.30002	Berretta lana	Wind wool cap
6	AAC.30038	Paraorecchie	Head warmer
7	AEP.30032	Ombrello	Umbrella

ABBIGLIAMENTO - CLOTHING LINE

1

3

2

4

ES	COD.	DESCRIZIONE	ITEMS
1	AAC.30400*	Tuta kart Lico	Racing suit Lico
1	AAP.30135	Tuta CRG personalizzata	Official sponsored CRG overall
2	AAP.30086***	Tuta pioggia	Racing suit for rain
3	AAP.30099	Sottocasco nero	Balaclava
4	AAP.30036	Paracollo	Neck protection

* Taglie/Size da/from 36 a/to 62
** Taglie/Size da/from S a/to XL
*** Taglie/Size da/from XS a/to XXL

1

2

3

4

5

ES	COD.	DESCRIZIONE	ITEMS
1	AAP.30154*	Scarpe kart pelle	New leather racing shoes
	AAP.30151*	Scarpe kart CRG Lico	Lico CRG Kart shoes
2	AAP.30101**	Protezione torace bengio	Bengio thorax protection
3	AAP.30150****	Guanti pioggia	Rain gloves
4	AAP.30163***	Guanti neri lunghi	Kart gloves black long
5	AAC.30106	Guanti lana	Wool gloves

* Taglie/Size da/from 36 a/to 46
** Taglie/Size da/from XS a/to XXL
*** Taglie/Size da/from 7 a/to 12
**** Taglie/Size da/from XS a/to XL

1

2

3

4

ES	COD.	DESCRIZIONE	ITEMS
1	AEC.30009	Borsa trolley	Trolley bag
2	AAP.30026	Grembiule lavoro	Mechanic apron
3	AEP.30154	Telo asciugamano nero	Black Towel
4	AEP.30014	Coprikart nero	Black kart cover

1

2

3

4

ES	COD.	DESCRIZIONE	ITEMS
1	AAC.30166*	T-shirt donna bianca	T-shirt white woman
2	AAC.30165*	T-shirt donna nera	T-shirt black woman
3	AAC.30200*	Canotta donna bianca	Top white woman
4	AAC.30201*	Canotta donna nera	Top black woman

ABBIGLIAMENTO BAMBINO - CHILDREN'S CLOTHING LINE

1

2

3

ES	COD.	DESCRIZIONE	ITEMS
1	AAC.30095 M	T-Shirt CRG 2016 7/8 anni	T-Shirt CRG 2016 7/8 age
	AAC.30095 L	T-Shirt CRG 2016 9/10 anni	T-Shirt CRG 2016 9/10 age
	AAC.30095 XL	T-Shirt CRG 2016 11/12 anni	T-Shirt CRG 2016 11/12 age
2	AAC.30134B4	Felpa nera bimbo cap 3/4 anni	Sweat shirt black child 3/4 age
	AAC.30134B6	Felpa nera bimbo cap 5/6 anni	Sweat shirt black child 5/6 age
	AAC.30134B8	Felpa nera bimbo cap 7/8 anni	Sweat shirt black child 7/8 age
	AAC.30134B11	Felpa nera bimbo cap 9/11 anni	Sweat shirt black child 9/11 age
3	AAC.30093B4	T-Shirt fluo arancio bianca 3-4 anni	T-Shirt white orange 3-4 age
	AAC.30093B6	T-Shirt fluo arancio bianca 5-6 anni	T-Shirt white orange 5-6 age
	AAC.30093B8	T-Shirt fluo arancio bianca 7-8 anni	T-Shirt white orange 7-8 age
	AAC.30093B11	T-Shirt fluo arancio bianca 9-11 anni	T-Shirt white orange 9-11 age

1

2

ES	COD.	DESCRIZIONE	ITEMS
1	**AAP.3065 S/M**	Sottotuta CRG tecnico manica corta	Undersuit short sleeves
	AAP.3065 L/XL	Sottotuta CRG tecnico manica corta	Undersuit short sleeves
2	**AAP.3090 XS**	Calze CRG tecniche (35/38)	CRG technical socks (35/38)
	AAP.3090 S/M	Calze CRG tecniche (39/42)	CRG technical socks (39/42)
	AAP.3090 L/XL	Calze CRG tecniche (43/46)	CRG technical socks (43/46)

C.R.G. S.p.A. Via Mantova 4/F - 25017 Lonato del Garda (BS)

Tel. +39 030 9912604 - Fax +39 030 9130714